2017-2020

PROGRESS

PROVISIONS FOR GREATER REUSE OF STEEL STRUCTURES

Research Fund for Coal and Steel
Grant agreement No: 747847

Improved design solutions for better reusability

March 2020

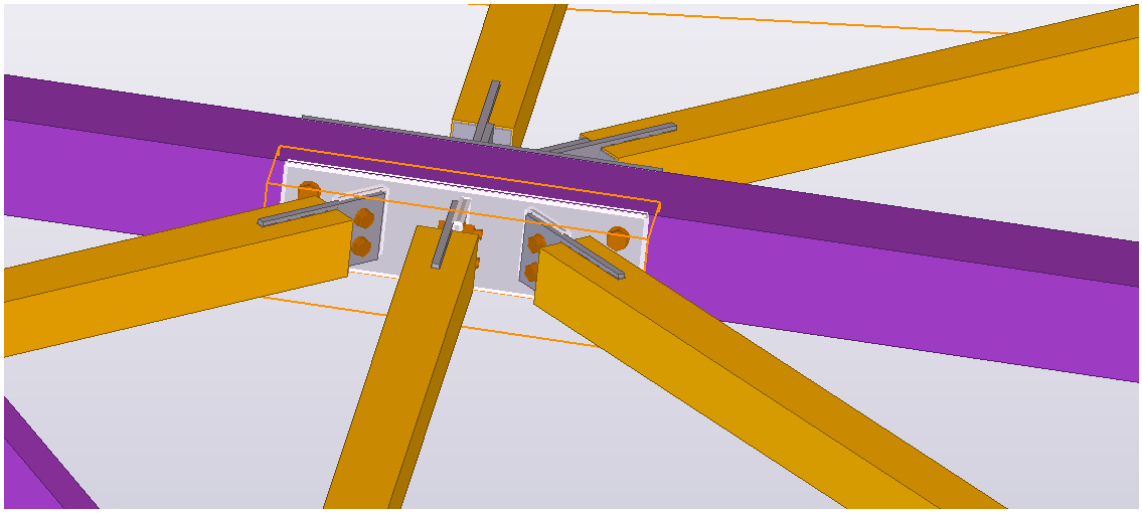

Deliverable: D 7.3 Improved design solutions for better reusability

Confidentiality: Public

Authors: **Juha Savolainen**
Sweco Rakennetekniikka Oy

Jyrki Kesti, Olli-Pekka Pajala
Ruukki Construction Oy

Executive summary

This report presents the Deliverable D7.3 of PROGRESS project. It is composed of two studies that were carried out independently on the same single-storey steel building case.

PART A: Designing steel framed buildings for reuse – Case study

This part focuses on the re-designing of the original building to achieve better dismount ability and future reusability of the separated components. Economic aspects are elaborated in this study for the evaluation of the feasibility of the proposed design alterations.

Main observation in this report was that universal reuse designing increases capital investment significantly compared to traditional designing. Therefore, many solutions presented in this report were not economically viable in present markets. However, it was possible to include several solutions improving reuse to case project even with minor extra investment. Main principles from design for deconstruction like regularity, generality and simplicity increase reuse possibilities significantly without increasing capital investment too high.

PART B: Reuse of buildings and their parts in single-storey buildings – Economic view

This part explores the areas of design for deconstruction, reuse and real estate valuation. The aim of the study is to discover and recognise the most important economic factors affecting the feasibility of design for deconstruction (DfD) and reuse. Then the study tries to find the economic positions, which would support the DfD and reuse of the building parts instead of current practice of not DfD and recycling and/or landfilling. The study also evaluates the possibilities to achieve these positions.

The study concludes that when the possible benefits of DfD and reuse happen far in future, this is not attractive for the investors. In addition, as the costs of DfD incur in the beginning there is a clear imbalance of the profits and costs from the investor's point of view. This means that currently, without any external financial incentive, it is not profitable to choose DfD building over the traditional building at least when the service life is more than 10 years.

Contents

Executive summary ... 3
Contents ... 4
Symbols and abbreviations ... 7
PART A: Designing steel framed buildings for reuse – Case study ... 8
1. Introduction ... 9
2. General background ... 11
2.1 Global environmental pollution ... 11
2.2 Environmental effects of construction industry ... 12
2.3 Steel ... 13
2.3.1 Environmental effects of steel production ... 13
2.3.2 Steel as a building material ... 14
2.4 Circular economy ... 15
2.5 Life cycle approach ... 16
2.6 Service life of buildings and building components ... 17
3. Reuse ... 19
3.1 Reuse potential of steel ... 19
3.2 Standards and guidance ... 19
3.3 DfD - Designing for deconstruction ... 20
3.4 Modularity and modular design ... 23
3.5 Challenges in reuse ... 24
3.6 Example projects ... 25
3.6.1 Beddington Zero Energy Development, BedZED ... 25
3.6.2 London 2012 Olympic Park, demolished steel portal frame ... 26
3.6.3 University of Toronto Scarborough Campus (UTSC) Student Centre ... 27
3.6.4 Roy Stibbs Elementary School ... 28
3.6.5 Summary of example projects ... 28
4. Case designing ... 29
4.1 Introducing the example building ... 29
4.2 Example building and DfD principles ... 31
4.3 Adjustments ... 32
4.3.1 Architecture ... 32
4.3.2 Loads ... 32
4.3.3 Structural system ... 33
4.3.4 Building components ... 34
4.4 Loads ... 37
4.5 Preliminary design ... 38
4.6 Calculations ... 39
4.7 Reuse designing ... 40

4.7.1 Columns ... 41
4.7.2 Trusses ... 44
4.7.3 Beams ... 46
4.7.4 Braces ... 47
4.7.5 Load-bearing sheets ... 50
4.7.6 Sandwich elements ... 51
4.7.7 “Expendable” parts ... 51
4.8 Component service life ... 52
4.9 Deconstruction plan ... 52
4.9.1 Deconstruction plan for case project ... 54
4.9.2 Reusable components ... 54
4.9.3 Possible end use for different components ... 54
4.9.4 Documents and traceability ... 55
4.9.5 Order of deconstruction and structural observations ... 55
4.10 Case results ... 56
4.10.1 Quantities and comparison between projects ... 56
4.10.2 Summary of solutions made to improve reuse ... 58
4.11 Case conclusions ... 61
4.11.1 Investment profitability ... 61
5. Results ... 67
5.1 Literature review ... 67
5.2 Case study ... 68
5.3 Conclusions and recommendations ... 70
5.4 Discussion of reuse designing ... 71
5.5 Suggestions for further research ... 71
PART B: Reuse of buildings and their parts in single-storey buildings – Economic view ... 72
1. Introduction ... 73
1.1 Background ... 73
1.2 Research questions and limitations ... 74
1.3 Structure of the research and used methods ... 75
2. Reuse of buildings and its parts ... 77
2.1 Circular economy ... 77
2.2 Design for deconstruction ... 78
2.3 Definition of reuse ... 80
2.4 Legislative aspects towards reusing building parts ... 80
2.5 General information about reuse of buildings and their parts ... 81
2.6 Obstacles for reuse of buildings and their parts ... 83
2.7 Measures to increase the reuse of the building parts ... 85
3. Service lives of the building ... 86
3.1 Technical service life ... 86

3.2 Functional service life ... 87
3.3 Economic service life ... 87
3.4 Examples of reuse and DfD projects ... 87
3.4.1 Maxi-market ... 87
3.4.2 S-Market Urjala ... 88
3.4.3 Pikkulaiva ... 89
3.4.4 Hakaniemi's temporary market hall ... 90
4. Business models in construction industry ... 92
4.1 Definition of the business model ... 92
4.2 Traditional business model ... 92
4.3 Life cycle model (PPP model) ... 92
4.4 Leasing / service model ... 93
4.5 Business model's suitability for DfD and reuse ... 94
5. Investment calculations in real estate industry ... 95
5.1 Valuation in general ... 95
5.2 Income approach ... 95
5.2.1 Direct capitalisation ... 96
5.2.2 Discounted cash flow (DCF) ... 96
6. Economic view of the reuse of building and its parts ... 98
6.1 Property information ... 98
6.2 Traditional DCF calculations ... 98
6.3 Residual value calculations (reuse vs. recycle) ... 104
6.4 Leasing option calculations ... 116
7. Discussion and conclusions ... 119
7.1 Research findings ... 119
7.1.1 Literature ... 119
7.1.2 Calculations ... 119
7.1.3 Overall ... 120
7.2 Research quality and reliability ... 121
7.3 Recommendations and further research ... 121
7.3.1 Recommendations ... 121
7.3.2 Further research ... 122
References ... 123
Appendix 1. Roof self weight calculation ... 133
Appendix 2. Total wind pressure calculation with force coefficient method ... 134
Appendix 3. Top chord manual calculation report ... 136
Appendix 4. Top chord calculation report from Robot ... 139
Appendix 5. Utilization ratios for structural components ... 141

Appendix 6. Load-bearing sheet calculation 145
Appendix 7. Column splice calculation 146
Appendix 8. Gusset plate connection calculation 156
Appendix 9. Sandwich element details 159
Appendix 10. Service life calculations 163
Appendix 11. Profile -, plate - and fastener quantities 167
Appendix 12. NPV calculations 183
Appendix 13. NPV calculations with smaller extra investment 189
Appendix 14. Interviews 195

Symbols and abbreviations

C_t	yearly profit
C_0	capital requirement
i	imputed rate of interest
n	the last year of service life
s	snow load of roof
s_k	snow load in ground
t	reviewable year
μ_i	shape coefficient
BIM	building intelligence modelling
DFD	design for deconstruction
EC 3	Eurocode 3. Design of steel structures
NPV	net present value
RV	residual value

PART A: Designing steel framed buildings for reuse – Case study

The aim of this part was to explore steel component reuse in construction industry. Report started with theoretical part which was executed as literature review. First part in literature review was an overview of general background which can be thought as a motivation to exploit steel reuse. It included environmental issues in general, in the industry and eventually in steel production. General background included also aspects from circular economy, life cycle approach and service lives of buildings and components. After the general background, theoretical part went through background in reuse. Some terminology, different levels of recycling and paramount concept of reuse, designing for deconstruction were introduced in the beginning. After basics, it was necessary to study previous publications on reuse challenges to understand why structural components are not reused more often. Theoretical part ended in studying five different example projects which all had used reclaimed steel. Topics presented in theoretical part were applied in case study which was the research part in this report. Case study was made with existing example building and intention was to design the case building in such way that most of the steel weight in the building could be reused after dismantling. Case designing started with introduction of example building and inspection of example building's suitability to DfD and reuse. Based on inspection, it was decided what adjustments needed to be done to the building. Case designing continued with establishing loads and calculating utilization ratio for structural components. After that, reuse designing was done to every structural component in the building. Before case results, some service lives was calculated and project's deconstruction plan made. Case results gathered quantities from example building and case project and compared those results to each other. After comparison, all solutions made in the report were gathered in a table which also presented solutions' effects on project quantities. Based on quantities, needed extra investment was estimated and with that reference number, investment profitability was estimated with NPV method. Three different calculations investment profitability calculations were made in case conclusions-chapte. Based on calculation results, some solutions were dismissed as unprofitable. 5th chapter was results and conclusions, and it first went through all results gathered from the report. Starting from the literature review and ending to case study results. After results were reviewed, conclusions, recommendations and discussion was done to end the chapter.

1. Introduction

Around the world scientists and governments have agreement that climate change is a global crisis which has the potential to threaten future society with considerable consequences. The use of fossil fuels has raised carbon dioxide emissions significantly which raises temperature of earth and leads into irreversible changes in planet's chemistry and climate. Due to mutual understanding of the threats, countries around the world have committed in different agreements that aim to reduce greenhouse gas emissions, to increase the use of renewable energy sources and raise energy efficiency. (Da Graça Carvalho et al. 2010.)

In 2015, government in Finland set an environmental law into force. Most important target of the law was to reduce emissions by 80 % for the year 2050, when comparing to year 1990. Construction and buildings consume lots of natural resources and generate large number of harmful emissions, so construction industry has a big effect in trying to achieve less polluting society. There has been a significant improvement in the energy efficiency of buildings since it has been a center of attention in reducing construction industries environmental impact. Buildings cause most of the negative effects to nature during the operation of the building so it is understandable that the construction and production of building materials has received less attention in reducing emissions and negative effects to nature. However, the proportion of material production and construction in industry's impacts on nature is increasing, because of the progress in energy efficiency of buildings. Reuse of building materials will have greater impact in reducing carbon footprint of buildings in the future. (Rantajärvi 2014, Ruuska et al. 2013.)

The reuse of structural steel is relatively marginally used method to reduce construction industries emissions and harmful effects on nature. In previous publications related to this topic calculations have been made to estimate the environmental benefits of reusing structural parts or elements. The best results were achieved in storage buildings, superstores and schools and almost every one of them were accomplished with steel columns and beams. The largest savings in emissions were achieved in steel framed storage buildings and schools. (Densley Tingley 2012.)

In previous publications of structural steel reuse, the most recurring restrictive factors for reuse were: toughness of deconstructing the building without damaging the parts and difficult connections of the parts. Due to schedule and financial reasons for projects, demolition is often a better solution in the end of buildings life cycle. With rational designing, there would be a possibility to increase reuse opportunities if the deconstruction would be considered already in the early stages of projects. Industrial buildings have a great potential when it comes to reuse, because they usually have relatively short service life compared to the life of structural parts. Steel is also very suitable material for reuse because of the mechanical joints and long service life. (Densley Tingley et al. 2017, Gorgolewski 2006, Gorgolewski 2008, Talja 2014.)

Goal of this report is to develop a functional solution for steel framed building in terms of maximizing the reuse potential of steel parts in the end of buildings life cycle. Primarily the solution should concern technical factors in structural engineering that have an influence in reuse potential of structural steel. Humans have been practicing structural element reuse for ages, but before industrialization reuse was based on needs and economic reasons. Nowadays new parts are easier and even cheaper to get, so reuse is mainly practiced because of ideologic reasons (Huuhka 2010

pp. 1-2). The biggest challenge of this report is to find structural engineering solutions that would make reuse competitive alternative.

The first part of the study is a theoretical part, which will be executed as a literature review. Aim of the review is to study the reuse of steel in as versatile way as possible and reasonable within the framing of the report. Literature review will focus mainly on the challenges of structural steel reuse and successful experiences in reuse projects. In the second phase of the study, a case project will be designed. Case projects building will be one-storied hall building with steel frame and the target is to find best possible structural solutions that improve steel reuse in the end of buildings life cycle. The information gathered in literature review will be exploited in project designing. Case project designing will mainly focus on technical part of structural engineering. Aim is to produce economic comparison between traditional designing and reuse designing.

Only the reuse of steel structures is concerned in this study and every other construction materials are outlined off the report. Due to material outlining, floor structures and foundations are ruled out of this report. Case project will be a new building designed with new parts and the designing will be focusing on increasing building components reuse potential in the end of building's life cycle. This study concentrates on relocated reuse, so reuse in existing location will not be included in this report. Aim is to improve reuse possibilities of individual building elements or component systems. Ecological comparison between different solutions will be left out of this report because previous publications of structural steel reuse have shown that reuse is ecologically better choice even in projects where the steel was not designed for reuse (Pongiglione & Calderini 2014).

2. General background

2.1 Global environmental pollution

The commercial business of humans has been growing exponentially since the 1950s. Because of the growth, nature and environment are going through increasing risk. The population of vertebrates has been decreased significantly between years 1970-2012. Many other species are in danger because humans are destroying the habitat of species. It has been stated that because of human actions four out of nine planetary boundaries have already been crossed: extinction of species, cutting down forests and natural lands, the amount of carbon dioxide in the atmosphere and the amount of nitrogen and phosphorous in oceans (Steffen et al. 2015). In year 2012, humans needed 1.6 earths yearly amount of natural resources to provide the consumption made that year. If there is no action done, humans will be the one to suffer in the future, since the Earth is not capable for providing the needs for human consumption. (WWF 2016 p. 3.)

Growing commercialism and consumption are also causing global warming in the Earth. Global warming is a significant global crisis, which affects in different ecosystems and communities around the world:

- yields are decreasing,
- oceans being polluted,
- forests burning,
- water systems running dry,
- glaciers melting,
- sea levels rising and
- new weather extremes occurring more frequently. (WWF 2017.)

Major reason behind global warming are fossil fuels, which are emitting carbon dioxide in to our atmosphere. Since the Industrial Revolution, temperature of the Earth has risen by about a one degree centigrade. All around the world, scientists and governments have agreed that there is a catastrophic climate change coming if we are not able to keep global warming under 2 °C. At the UN Paris climate conference in 2015, different governments made an agreement to keep the warming under 1.5 °C. (WWF 2017.)

Human actions have caused these serious impacts for the Earth, but fortunately humans are also capable of curbing unsustainable development. Co-operation of governments and big corporations, technological innovations, negotiations in trade agreement and the effects of large social organizations make the greatest leverage to prevent effects. To make progress towards sustainable future, a considerable change should appear in the global economic system. Human development should be separated from spoiling the nature and consuming goods. To achieve this, there is a need to make significant changes in the protection of natural capital, administration, energy and food systems, equal sharing of food, water and energy, sustainable markets and reasonable balance between production and consumption. (WWF 2016, p. 31.)

2.2 Environmental effects of construction industry

The aim of ecologically sustainable construction is to save natural resources and decrease environmental damage. In practice, this means decreasing energy flow and material flow of construction industry. Decreasing energy flow and material flow also decreases wastes and emissions. (RIL 2013 p. 189.)

Construction industry is one of the biggest consumers of resources and one of the largest polluters of environment (Ding 2007 p. 463). Buildings cause changes and stress for the environment throughout their lifecycle. These environmental impacts are due to generating emissions and waste, using resources and land use (Häkkinen et al. 1999). When aiming to eco-friendly and sustainable construction, projects environmental guidelines should be determined as early as possible when it is easiest to include environmental matters to the project (Ding 2007, Ortiz 2008).

The environmental loads during the operation of building consist of heating and air conditioning houserooms, service spaces and social premises; electricity consumptions and heating motive water (Vehviläinen et al. 2010). In the construction phase, the biggest environmental load is caused by producing building materials. Material production consumes great amount of energy and generates carbon dioxide emissions, but if the product is durable, recyclable and easily maintained the environmental effects of the production will decrease. Carbon footprint is a numerical method to evaluate the environmental load of a product and it depends on, for example, emissions from transport and manufacturing, and the production method of energy used by the manufacturing process. (Ruuska et al. 2013.)

Buildings and construction have great influence on the environmental load in Finland. In 2007, The Finnish Innovation Fund Sitra, published a report on energy use and greenhouse gas emissions of construction industry in Finland. Greenhouse gas emissions in Finland in 2007 were 78 MtCO2-eq. and total energy use was 307 TWh. Buildings accounted for 32 % of the emissions and 38 % of the energy use, construction accounted for 6 % of the emissions and 4 % of the energy use. In the report, greenhouse gas emissions and energy use was divided into five different sectors: buildings, construction, industry without buildings, transport and others. As the transport was involved with own sector, it is possible that constructions influence is larger than it shows in the report. (Vehviläinen et al. 2010.)

It is worth noticing that the energy efficiency of buildings has improved significantly since 2007. Ratio mentioned in Sitra's paper does not reflect the situation in 2017 well enough, because with passive and low-energy houses, construction can account 30 % of the energy use (Suomen arkkitehtiliitto 2017). Energy use of building stock was divided in four parts in the report: detached and holiday houses, apartment and terrace houses, service buildings and industrial buildings. According to authors, there was far less information available on electricity use and heating of industrial buildings. Therefore, the report only gives a rough estimation of the distribution of energy use and greenhouse gas emissions for industrial buildings. Environmental impacts on the operation of industrial buildings have been reducing because of energy efficiency and therefore the relative share of the environmental impacts of construction and production has been increasing lately. (Vehviläinen et al. 2010.)

2.3 Steel

Steel is a metal alloy with iron as its base material. Steels chemical composition can vary a lot depending on the grade. Alloying components of steel are for example carbon, chromium, nickel, molybdenum, silicon and manganese. The most essential alloying component is carbon, which has great impact on steels attributes. Carbon content of steel is at most 1.7 % and iron-carbon-alloys with higher carbon content are called cast iron. Steels are distributed to different grades depending on carbon content. The greatest feature of steel is the high strength, that separates it from other building materials and makes it the most important metal. (Väisänen 2007.)

2.3.1 Environmental effects of steel production

Steel can be produced from iron ore or recycled steel. In ore-based producing, raw materials are mined from the ground and the production process consumes about five times more energy than steel manufactured from recycled steel (Väisänen 2007). Approximately 40 % of world's steel production is manufactured by using recycled steel as a raw material. (Metallinjalostajat ry 2014, p. 107.)

Carbon dioxide emissions from steel manufacturing mainly depends on two factors: carbon content of raw material and carbon intensity of electricity used in the process (Birat et al. 1999). In ore-based production, carbon is used in furnace process to reducing and producing energy. There is no reasonable alternative to using carbon as a reducer in the furnace process so carbon dioxide emissions are quite high in ore-based manufacturing. 3-4 % of all greenhouse gas emissions in the world are caused by the steel industry. (Metallinjalostajat ry 2014, p.107.)

For one metric tonne of produced steel, energy use and amount of used raw material depends quite lot on manufacturing method. Amounts of energy and raw material in different manufacturing methods is shown in Table 1.

Table 1 Amounts of energy and raw material used in different steel manufacturing methods in (Metallinjalostajat ry 2014)

Method	Energy [kWh]	Amount of raw material	Scrap steel [kg]
Ore-based	4700	1200	180
Electric-arc furnace, non-alloy steel	1600	1150	1050
Electric-arc furnace, alloyed steel	1700	1200	220

Steel manufacturing process generates waste and causes emissions to air and water. Example of environmental impacts of metric ton of non-alloy steel made with electric-arc furnace-process:

- Emissions to air: Carbon dioxide 230 kg; nitrogen oxides 0.5 kg; dust (mainly iron oxide) 0.2 kg; zinc 2.5 g and lead 0.2 g.
- Emissions to water: Solid matter 76 g; oil 1.7 g; zinc 2.3 g and lead 0.1 g.
- Wastes: 260 kg of waste and 10 kg landfill waste. (Metallinjalostajat ry 2014.)

Emissions and wastes listed above are examples of the ecobalance of a Finnish steel mill. They are generated in process which is the most ecologic option of all steel manufacturing processes and in country which is internationally one of the best in low specific emissions and used raw material. In ore-based production, emissions are way bigger and over half of the worlds steel production is made by furnace-process. Modern furnaces generate about 1650 kg of carbon dioxide emission for one metric ton of steel produced. About 0.25 % of worlds steel production in 2016 were made in Finland. It can be assumed that international steel production generates more wastes and emissions than the example above. (Metallinjalostajat ry 2014, World Steel Association 2017.)

It must be noticed that, reusing does not decrease the demand for steel in the world, but it will certainly make steel a little more sustainable material. Reusing buildings, component systems or individual elements is a good way to decrease CO2 emissions. Recycling structural steel to scrap means that steel will eventually be re-melted and the melting process demands energy and causes CO2 emissions. Alternatively, the additional energy for reusing is caused by deconstruction, transportation and the possible maintenance and repairing needed for components or elements. (Fujita & Iwata 2008.)

2.3.2 Steel as a building material

The history of steel construction is relatively short and at the beginning steel was used in connections of wood- and stone structures. For example, nails and dowels were made from steel. In 16th century opportunities started to improve because forging of steel bars and steel plates was invented. First bigger iron structure was the Ironbridge made from cast iron. Ironbridge was built in England 1776-1779 and it is still standing. Ironbridge’s span is 30 meters and its arching technology was copied from stone bridges of that era. Cast iron is not suitable for use if tensile stress is high, so arching was a reasonable structural choice for Ironbridge. The Ironbridge was so unique that the community around the bridge was named after it. (Hämeen ammattikorkeakoulu 2008.)

The most famous steel structure in the world must be the Eiffel tower, which was built in 1889. It took 17 months to build this over 300 meters tall truss structure masterpiece. Until early 1900, riveted joints were the most popular type of connection for steel parts, so they were also used as steel part connections in Eiffel tower. Foundation for modern steel construction was created in the early 20th century when at the same time, welding was invented and rolling technology developed into a whole new level. I-beam rolling was patented in 1895 and due to I-profile implementation, high-rise buildings became more common in United States. Nowadays, steel is a natural choice when designing high-rise buildings. (Hämeen ammattikorkeakoulu 2008.)

Prefabrication possibilities of steel makes the erection of steel structures efficient and fast. Therefore, less money and time is needed for construction. Using steel columns and steel beams allows longer

spans in building which gives more surface area to buildings and makes them more flexible for changes. Steel-frame also offers great possibilities for building renovations and extensions. If needed, it is easy to weld stiffeners or reinforcement to beams and columns in site. Steel is magnetic material, so in demolition work it can be separated from other materials quite easily. (Hämeen ammattikorkeakoulu 2008.)

With rolling, steel can be shaped in different forms like bars or plates. Bars are usually hot-rolled and plates can be both hot- or cold-rolled. Bars and plates can be used as they are, or they can be reprocessed to components. Bars include round rods, flat bars, angles, circular and rectangular hollow sections and different I- and U-profiles like IPE-, HEA- and UPE-profiles. Plates can be divided into different categories based on their thickness. Heavy plates are at least 5 mm thick, medium plates are 3-5 mm thick and sheets are under 3 mm thick. Beams can also be welded into demanded shape. In theory, every thinkable shape or geometry is achievable with welding, but it is more expensive than hot-rolling. (Hämeen ammattikorkeakoulu 2008.)

There are different applications for different steel components. The most common applications are listed below:

- I-profiles: Beams and columns.
- Hollow sections: Columns, beams, bracing and trusses.
- U-profiles: Beams, truss beams, bracing, stringers and rungs.
- L-profiles: Truss beams, connection pieces and rungs.
- Round rods and flat bars: Tension bars and connection pieces.
- Sheets: Corrugated sheets, purlins and multilayer panels.
- Heavy and medium plates: Welded beams.

2.4 Circular economy

There are three types of industrial economy systems: linear economy, circular economy and performance economy. Linear economy is very straightforward business model. Products are made through different manufacturing stages and every stage adds value to the product. When the product is sold, the buyer becomes possessor and all the risks and responsibilities move forward to the buyer. Performance economy aims to sell services by renting, leasing or with share business models. Products maintain in possession of producers through their life cycle so producers must carry the risks and responsibilities of the product. Linear economy does not encourage producers to make their products last, but performance economy on the other hand, is the opposite, since profits are made with long-lasting performance. (Stahel 2016.)

Circular economy bases on using and sharing services instead of possessing goods, so it settles between linear economy and performance economy. It aims to prevent material loss and thus, energy is saved and new jobs are generated around the preventing. Restoring a product takes usually fewer resources and more workforce than producing a new one. Circular economy has two main groups of business models; ones that are extending service life by reusing and remanufacturing and ones that use old products as resources for producing new ones. Main idea of circular economy is **to maximize the value of a product or component at every single point of its life cycle**. Closing the recovery loop needs innovations and new technologies, so circular economy relies

strongly on designing phase of products and components. (Stahel 2016, Pantsar 2017, Ellen MacArthur Foundation 2017.)

Linear economic is the dominant business model nowadays, but unfortunately it is starting to reach physical limits. Circular economy might be an excellent alternative, but it has not gained enough popularity yet. However, global warming, greenhouse gas emissions, unethical production and resource security have made people thinking about consumption habits and the possibilities of preventing materials. If there would be a shift in business model it would need to be government-led. There is a need of research and innovations in different fields. Ecological impacts should be economically viable, so cooperation is needed with economics and scientists. Reuse designing should be done in regular basis, so standardized measurements and modular systems should be developed for different products. But most importantly, general attitude should be changed by spreading the information. People connect novelty to quality and products long life cycle might be even seen unpleasant instead of useful and resourceful. (Stahel 2016, Ellen MacArthur Foundation 2017.)

2.5 Life cycle approach

In Finland, technical and economical approach based on buildings life cycle is called life cycle technology. Life cycle technology aims for economically, socially, culturally and ecologically sustainable development and durability. Main applications for buildings life cycle technology are life cycle costs, energy efficiency, impacts on nature, material efficiency and securing durability, usability and healthiness. Life cycle approach is very demanding in construction, because buildings and structures are products with longest lives in our society. Knowing the designing methods and executions of life cycle approach is extremely important professional asset for experts in construction industry. (RIL 2013.)

Life cycle technology is a theory and a practice that aims to optimize life cycle quality. Demands of life cycle quality are: operational requirements, economical requirements, ecological requirements and cultural requirements. (RIL 2013.)

Life cycle includes buildings or building parts phases from source material procurement and production to reusing, recycling or finishing the generated waste. Life cycle technology is applied various ways in different stages of project. Construction contracting and possession covers the whole life cycle of building. It includes designing; construction; operation, maintenance and repairing and reuse, recycle and waste management. At the beginning, targets must be set comprehensively for the whole life cycle of building. Decisions in designing and implementation stage are based on technical and economic life cycle evaluations. (RIL 2013.)

- **Designing:** Thorough and high-quality designs, which covers the whole life-cycle. Risk management and quality control are defined concretely in designs.
- **Construction:** Life-cycle targets defined in designing stage are followed in final selection for products, proper function of risk management / quality control and careful documentation of designs and implementations.
- **Operation:** Systematic and programmed maintenance and service based on the operation and maintenance plans, controlled operation and monitoring buildings energy consumption.

- **Reuse, recycle and waste management:** Reuse and recycle opportunities are considered in designing stage and as high recycling ratio as possible in demolition phase. (RIL 2013.)

Life cycle designs consider all perspectives and demanding groups of life cycle quality and designing is made with life cycle approach so all inspections mentioned before are considering the whole life cycle of building. Life cycle designing targets to produce a solution for constructing a building in sustainable way and fulfilling the requirements of owners, users and society throughout its life cycle with controlled and optimized way. Life cycle designing demands tight cooperation from all interest groups. Extra investments are needed from the owner in the designing stage but as a result, buildings usability, reliability and value in the future will increase. (RIL 2013.)

2.6 Service life of buildings and building components

Design working life is a hypothetical period that building or building component should be able to be used in the function it was designed to. Design working life of building is defined in designing stage of project. Eurocode gives indicative design working life for different buildings and it depends on the type of structure. Different types of buildings are divided into classes from one to five. For example, indicative design working life for temporary structures (class 1) is 10 years and for monumental structures, bridges and civil engineering structures (class 5) it is 100 years. Building designing should consider the fact that buildings become weaker over time. Degradation cannot weaken buildings performance to a lower level that it was intended to when environmental conditions and assumed maintenance level is considered. Several factors must be considered to achieve durable structures, including: intended use, design criteria, expected environmental conditions, material attributes and functionality, soil attributes, choice of structural system, shapes and details of components, quality and supervision of construction, special protection procedures and buildings maintenance plan. (Finnish standards association 2006.)

Between 2000 and 2012 over 50 000 buildings were demolished in Finland. Most of them were detached houses, utility buildings and holiday cottages, but when measured in volume, industrial buildings were superior compared to other groups. About equal amount of residential buildings and non-residential buildings were demolished in the period, but total volume of non-residential buildings was nearly five times higher than residential buildings volume. Average age of residential buildings was 58 years and average age of non-residential buildings was 43 years. For example, commercial and office buildings were demolished in the average age of 39 years, industrial buildings and warehouses in 37 years, transport buildings in 36 years, agricultural buildings in 35 years and public buildings in 41 years. Steel buildings counted for 2 % of total number of buildings, but nearly 1/5 of industrial buildings and warehouses were steel-framed. (Huuhka & Lahdensivu 2016, pp. 15-25.)

Service life planning is instructed by standard ISO 15686. Standard defines the main phases of service life planning and principles of estimating service life. The planning starts with setting a service life target for the building and determining required functionality and criteria of functionality loss. Building components that shall be repaired, fixed or replaced within the service life of building should be determined in target setting. During the preliminary design, it should be revised if the service life target is reachable within projects budget, schedule and functionality demands. After preliminary stage, detailed designing is started and building material and components are chosen. (Vares et al. 2008.)

There is two recommended ways to estimate service life of building components in ISO 15686-1. In the first option, expected service life is evaluated with practice experiences, field tests and analysis of test results. The other option is to evaluate expected service life with factor method. A reference service life is needed for the evaluation and it is estimated with: data from producer, practice experience information, national and international certificates, common knowledge from literature and standards. Final estimated service life is a product of following numerical factors:

- A: quality of components,
- B: quality of designing,
- C: performance level of different work phases like transporting and workshop production,
- D: stress from indoor circumstances,
- E: outdoor environmental stress,
- F: operational stress,
- and G: level of maintenance. (Vares et al. 2008.)

Expected service life is a product of reference service life and all factors mentioned above. With proper designing that takes every factor into account, steel parts service life can be very long. (Vares et al. 2008.)

Steel can be protected from corrosion with protective paint, hot-dip galvanizing or duplex system, which means that both hot-dip galvanizing and protective paint is used. Duplex system provides a coating which gives longer service life than the common lifetime of hot-dip galvanizing and protective paint in total. Theoretically, over 200-year service life is reachable with duplex coating (Leino et al 1998). When components are reused, they often need to be refabricated a bit. If there is a need to weld connecting plates or stiffeners in to profile, the coating must be removed. Therefore, designing the coating needs a proper thinking in the designing phase when components are designed to be reused.

3. Reuse

Recycling, downcycling and reusing are often muddled up, because in some contexts they are hard to separate. In construction industry, recycling means that waste is exploited in construction material production. Downcycling in construction industry is a process where waste is used in less demanding applications, for example concrete demolished from a building can be used in excavation work. Reuse on the other hand, is the action where components or products can be used again after its life cycle is over in the first purpose. Initial form of the component will remain the same, but small readjustments and repurpose can take place when reusing components. In the case of steel, the most important factor is that it will not be re-melted. (Densley Tingley et al. 2017, Talja 2014.)

Generally steel parts get recycled at the end of their life cycle but reuse decreases greenhouse gas emissions more efficiently than recycling. Reuse is possible for whole buildings, component systems like trusses or working platforms and for individual elements like beams or columns. Reuse can also be divided in two different categories: reuse in existing location and relocated reuse. (Densley Tingley et al 2017.)

In Finland, reuse and recycling practices are divided in to eight different levels: Reusing whole building in existing location (level 1), deconstructing building and reusing it in new location (level 2), reusing structural element (level 3), reusing structural element after itemizing partly (level 4), using structural element or material as a resource (level 5), using structural element or material as artificial fill (level 6), using structural element or material as a fuel for producing energy (level 7) and safe disposal of waste (level 8). (RIL 2013 p. 85.)

3.1 Reuse potential of steel

Steel has great potential when it comes to reusing structural members. With mechanical connection, deconstruction is easier, but steel is also reusable with welded connections that need minor cutting and reprocessing. There are two major changes to steel due aging: corrosion and plasticization. Corrosion is the most important factor that deteriorates steels abilities over time. Plasticization can be caused by large-scale seismic loads, but this problem only appears in seismic zones. Steel can be corrosion protected with hot-dip zing coating, protective paint or duplex protection (both hot-dip zinc coating and protective paint) and protection to earthquakes can be handled with designing. Due to its excellent material properties, long service life and mechanical connectivity steel is very suitable material for reuse. (Fujita & Iwata 2008.)

3.2 Standards and guidance

The basis for waste management acts in construction and demolition in Finland is European Union's directive 2008/98/EC, which does not directly order member states, but it binds them to enforce orders on national level. Key target in the directive was that by 2020, at least 70 % of all waste in construction and demolition should be recycled. Other acts or regulations that guide waste managements in Finland are listed below:

- Waste act 646/2011.
- Waste tax act 1126/2010.
- Government decree on waste incineration 151/2013.

- The environmental protection act 527/2014.
- Government decree on landfills 331/2013.
- National waste plan.
- Land use and building act 132/1999.
- Land use and building decree 895/1999.
- Municipal waste management regulations.
- General conditions for building contracts Yse 1998. (Huuhka 2010, pp. 14-15.)

As it shown above, waste management guiding in Finland is a complicated system with contradictory in some respects (Huuhka 2010, p. 15). This might affect to the possibilities to use reclaimed components in construction.

As previous studies demonstrate, construction industry has a clear lack of guidance in structural steel reuse. There is uncertainty of how to design with reused steel and how to test the components. Reuse knowledge should be improved all around the construction industry with guidance and education. Clear and elaborate designing and testing procedure guidance and standards should be developed to help the designing process and remove doubts among designers, constructors and clients. Guidance is also needed in recertifying the reusable structural components. For example, in Finland there are no regulations concerning the structural integrity of reclaimed structural components, so there are two options to prove eligibility of a product: verification certificate or verification on the construction site. Content of the verification depends on the product and material in question, but there is no convention on reusable products due to remote experiences. Verifications in Finland are given by organs approved and specified by The Ministry of the Environment. (Densley Tingley et al. 2017, Talja 2014.)

3.3 DfD - Designing for deconstruction

According to Crowther (2001), biggest obstacle for reusing building materials and components are the challenges in deconstructing buildings. There is delusional understanding amongst human that building is singular. Consequently, construction industry depends on fixed connections which lead to problems in repairing, maintenance and eventually – demolition instead of deconstruction. Buildings keep on changing through their lifecycle due maintenance and adjustments, which are driven by changes in needs and circumstances. To solve these problems, experts around the field have developed a theory of time related building layers. In layman's terms, theory's main point is that parts with different service lives can be separated from each other.

The most common understanding is that building consists of six layers (Brand, 1995). Crowther (2001) points out that it is appropriate amount for most buildings, but should not be considered as a limit. The six layers are: Site, structure, skin, services, space plan and stuff. Site is the ground where building is, and it is thought to be eternal. Structure is foundations and load bearing frame components; service life is 30 – 300 years. Skin includes wall and roof; expected service life 20 years. Services are for example electric and HVAC; service life 10 – 15 years. Space plan means finishes and furniture; changes in every 3 years. Stuff are the movable items inside the building; changes might occur monthly. These layers should be clearly distinct structures so each of them can be deconstructed on their own. When structures are independent, it is easier to do maintenance,

fixing or exchange the whole component. Eventually this will help recycling and reusing when building is deconstructed. Author's interpretation of time related building layers is shown in picture 1. (Brand 1995, Crowther 2001, Talja 2014, Gorgolewski 2006.)

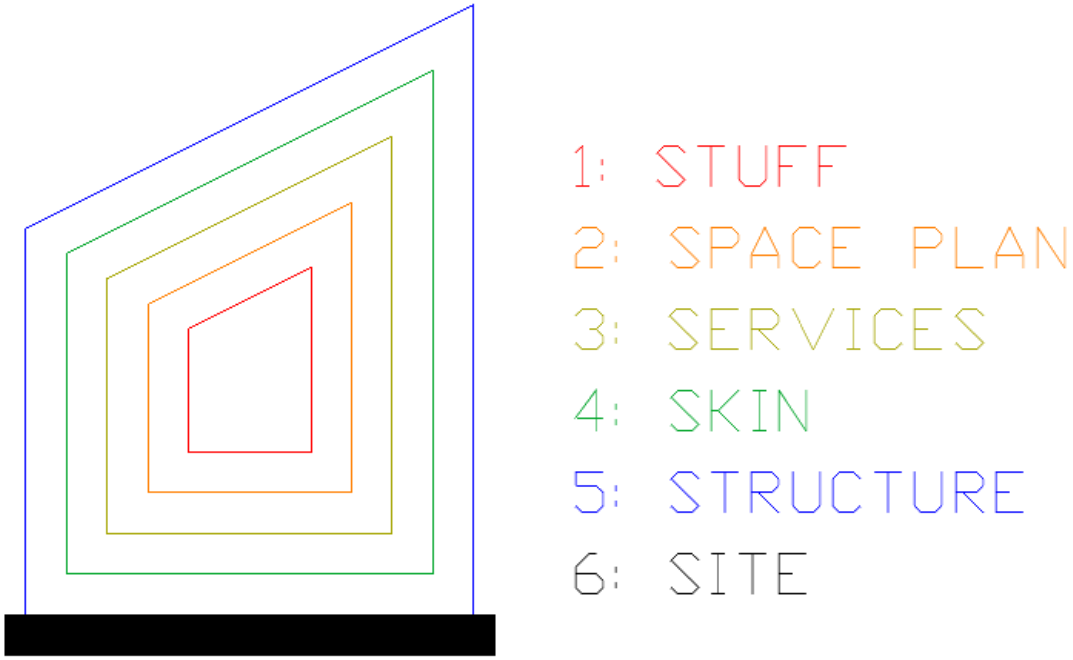

Figure 1 Author's interpretation of time related building layers.

Designing building for future maintenance, repair and deconstruction - rather than demolish - is called DfD which is short for designing for deconstruction. Basically, DfD is founded on the theory of time related building layers. Aim of DfD is to exploit materials, components and systems from deconstructed building as effectively as possible. In the designing phase, dismantling should be considered comprehensively and assemblies, components, materials, connections, structure systems and information chains / management are selected concerning the deconstructing, repairing and maintaining of building. The purpose of sorting materials, systems and components is to achieve economic and environmental benefit which both will happen with ulterior reuse and recycling. Designing for deconstruction is extremely relevant factor in planning stage when structural components are designed to be reused. (Guy & Ciarimboli 2008.)

There are plenty of essential factors that affect deconstructing in the end of building's life cycle. Designing for deconstruction is thoroughly studied subject by many different researchers. The following list of factors came up in DFD literature review.

Connections: Connections should be designed to be transparent and easy to dismantle with non-destructive methods. It is also important to have limited amount of different connections in the building (Hradil et al 2014, p. 49). Mechanical connections are easier and quicker to deconstruct and separate. Welded connections need cutting so it is harder and slower option and the cutting might damage the component. Connection's stability is also easier to notice when deconstructing mechanical connections since it is usually visible when the connection becomes unstable. With

welded connections, the instability point may come suddenly and unwarned. (Gorgolewski 2006, Webster & Costello 2005.)

Deconstruction plan included in designing phase: Deconstruction plan should be part of designing phase of a new building. If plan is designed by both architect and structural engineer, they can mutually decide on the use of space or jointing technique to improve recycling of material and component reuse (Talja 2014). Challenges that might occur during deconstruction should be considered already in the designing phase (Gorgolewski 2006). If deconstruction plan is not provided, materials end up in landfill waste more easily (Hradil et al. 2014). Deconstruction plan could consider for example recycling plan, deconstructing method and logistics of deconstructing. Selection decision should be based on well-known and researched methods (Talja 2014).

Building's simplicity, transparency and regularity: Simple and regular layout facilitates dismantlers work a lot because structure is more understandable. Identical connections and profiles should be found around the building so components are easier to sort when they are deconstructed. For structural engineers and architects the main rule is: it is easier to deconstruct buildings with smaller amount of large profiles than with larger amount of small profiles. Common and long spans lead to common component profiles which are more likely to be reused. Simplicity and regularity also speeds up the dismantling process and makes it more cost-effective. Buildings with complex structural system and geometry are hard to dismantle. Custom-made, non-standard components are tough to reuse because it is challenging to find use for them in other buildings. (Webster & Costello 2005.)

Flexible and adaptable building: It is important that buildings spaces are easy to change and adapt to new applications. Usually flexibility and adaptability is directly proportional to span length. Longer spans lead to more adaptable and flexible buildings. Adaptability and flexibility should also concern changes in technical building systems so it is important that structural engineers and technical engineers work together to achieve flexible spaces. (Talja 2014.)

Tight cooperation with different parties: DfD should be considered in early stages of the project. It is necessary that all parties work together tightly and understands the goals. Especially design team, technical experts and clients make important decisions that have big effects on the eventual deconstruction. (Hradil et al. 2014 p. 50.)

Minimize the amount of different material grades: Separating building components is very demanding if mixed material grades are used. Different material grades look similar but they have different properties. Grades could be easily mixed up when components are deconstructed and divided into different piles. Similar material grades increase efficiency of deconstructing, dividing and identification which results to more probable reuse. It also increases the resale value of building components. (Webster & Costello 2005.)

Traceability of parts: Materials should be labeled accurately because labeling helps with sorting and it will simplify reuse (Webster & Costello 2005). With present technologies, it is possible to insert unique identification RFID tag to a steel element by branding. Tag could include information like material grade, component dimensions, manufacturing date and place, embodied energy, guarantee limits, carbon content or even stress data produced by stress sensors linked to tag. Information can be input in the tags backend system whenever modifications are made to component. When a

component is about to be reused, there could be huge amount of valuable information for structural engineer. (Ness et al. 2015.)

Altogether, DfD demands lots of extra effort, tight cooperation from the designing team and extra investment from the customer, but it is worth it. DfD certainly increases reuse potential of building components, but it has plenty of other positive effects for construction industry. Buildings become more adaptable, which meets the markets demands for flexible buildings that can adapt to changes in internal use, additions and subtractions. Adaptability and flexibility leads to more durable buildings. Resale value for building maintains higher and markets are wider when adaptations are possible. Building components are easier to maintain, repair or even exchange. DfD decreases waste management costs and waste loads in the end of building's lifecycle. Comparing to demolish, deconstruction is a better option for the environment. It creates lesser noise and dust and requires fewer machines on site. (Webster & Costello 2005, Crowther 2001, Talja 2014, Densley Tingley 2012.)

3.4 Modularity and modular design

The concept of module is often thought to be an independent singular in a complex of modular product. These singulars can be removed and changed or combined to another complex. Originally module meant the measure of length and often geometry is thought to be the main point of modularity. However, the concept of modules and modularity is nowadays bound more to functionality rather than geometry. Modules are structural components that have both standardized and functional attributes. Standardized, prefabricated structural components are not necessarily modules, if they do not have essential functional role in the structure. Most of the modern construction is based on combining prefabricated structural components, but the modularity depends on the functionality of the components. For example, modular apartment buildings would not be possible without the technical building services attached to each module. (Kotilainen, 2013.)

Target of modular design is to create a complex (modular product) of physically removable singulars (module). Modular products have many assets on them:

Design models of thoroughly modularized product can be exploited in future models.

Product range with minor variances can be created.

Modular design potentially increases opportunities for modules to be reused, recycled or re-manufactured.

Repeatable practices create advantage throughout products life cycle from designing to recycling. (Gu & Sosale, 1999.)

It is important to assure that modular product functions properly even when it is assembled from modules. As said before, modules interact physically and functionally and these interactions need to be considered when designing modular products. Different components have different service lives and when product comes to the end of its service life, there might be some components in the product that are still good for use. Modular design helps dismantling these products and helps to figure new applications for these products. (Gu & Sosale, 1999.)

3.5 Challenges in reuse

There are several challenges in reusing structural elements and they depend on different interest groups in construction industry. Challenges recognized in three different studies are shown in table 2. There is a three-star rating system in the table, which indicates the importance of challenge or barrier. One star means that the challenge in question was mentioned in the study as a potential barrier, two stars means that it was considered as a rather significant factor and three stars means that it had significant effects on reuse possibilities. If identified challenge got at least four stars, it is bolded in the table. All challenges that are directly depending on work of structural engineer are underlined.

Table 2 Challenges recognized in reuse (Densley Tingley et al 2017, Gorgolewski 2008, Talja 2014).

	Densley Tingley	Gorgolewski	Talja
Risk	**	**	
Cost	***	***	*
Composite	****		****
Supply chains	***	**	
Deconstruction	**	**	**
Connections/Joints	**	**	**
Traceability	**	*	**
Availability/storage	**	**	
Client interest	****	****	
Standards/codes		*	***
Structural properties	**	**	***
Recertifying	*	*	***
Designing	*	***	
Different application		****	
Experience/knowledge	****	*****	
Deterioration			****
Coating			****
Inertia in the industry	****		

These three studies had different approaches in identifying challenges in reuse. Densley Tingley et al. (2017) used literature review to recognize challenges and barriers. Based on this literature review authors arranged an interview with 13 construction industry members in UK. Members were contractors, structural engineers, fabricators and architects. Gorgolewski (2008) studied two case projects in Canada, where reused building components were used. Gorgolewski defined challenges

confronted in case projects based on his observations. Challenges in Talja's (2014) report were discovered in "ReUSE"-project. The project is one of the green economy projects of Ministry of the Environment of Finland. Challenges were separated in three larger topics: Change of building codes, impact of construction methods and certifying the conformity. These larger topics were divided in smaller challenges. Only Densley Tingley's study arranged challenges in order of importance. (Densley Tingley 2017, Gorgolewski 2008, Talja 2014.)

Different factors were overlapping and the same challenges were presented different ways in different papers. It means that the star rating is not very accurate, but it gives approximate estimation of the factors that are restricting reuse. 11 factors got at least four stars in total and those are bolded in the table. Four out of these 11 factors depend directly and three of them indirectly on the work of a structural engineer. The four direct factors are: deconstruction, connections / joints, structural properties and problems in designing. Three indirect factors are: risk, cost and traceability. Remaining four factors are dependent on governmental directorship and change in supply chain/markets/construction industry. All factors are bounded with each other, so improving one will improve another.

3.6 Example projects

To find best possible solutions for the designing phase, it was necessary to study projects that have used reclaimed steel in one way or another. This chapter presents different projects featuring reused steel. Aim is to find mutual reasons from the projects that define whether the project was successful or unsuccessful.

3.6.1 Beddington Zero Energy Development, BedZED

BedZED is a mixed building with 82 flats and 18 work spaces and altogether 8500 m^2 floor area. Structurally the building uses load-bearing masonry structure, but it also includes about 100 tonnes of structural steel mainly in work space areas. Projects primary target was to demonstrate that large building project with several purposes of use could still be designed with considering sustainability broadly. (Sergio & Gorgolewski.). According to (Sergio & Gorgolewski), projects architect Bill Dunster had problems to convincing people that reclaimed steel could be used in the project, but after quality assurance systems got started the problem was gone. Eventually, 95 % of steel needed in workspace areas was reclaimed steel. Only the curved beams used in arched link bridges in the building were not reclaimed profiles, because there were no benders found locally who were willing to bend reclaimed beams. Since there were no markets, design team had problems tracking down sources of reclaimed steel. Construction managers and design team started to contact local scrapyards and demolition companies in 50 km radius to find suitable profiles. After finding possible sources, structural engineers went to research the potential components and found one source with appropriate profiles. This source covered most of the reclaimed steel needed in the project. Project's sustainability consultants (BioRegional) made a notice that it is harder to get the contractor to commit to reuse process in projects with tendered contract, if it is not clearly stated in the contract. If construction management contract is used, construction managers are far more interested in committing to using reclaimed materials. (Sergio & Gorgolewski.)

Amongst design team, the general assumption was that designing with reclaimed steel would be very difficult, but this assumption proved to be a little harsh. Before visiting the potential sources for

reclaimed steel, structural engineers had already determined profile sizes and connections approximately. Connections were designed to be adaptable to different sizes and profiles. Also, the structural characteristics of reclaimed profiles had to be determined which means profiles had to pass building code requirement and satisfy the needs of client. Structural engineers inspected profiles before purchasing them. Inspection included manufacturing date, condition, number of connections and possibility for re-fabrication. Reclaimed steel were standard profiles, so structural engineers could find information about structural performance of historical profiles available in the UK. These procedures assured clients and officials that reclaimed steel could be used. (Sergio & Gorgolewski.)

Steel components were re-fabricated in local workshop and one considerable difference was noticed between the fabrication of new steel and reclaimed steel. Extra sandblasting had to be performed for some components to clean them before applying finishes so the cleaning of reclaimed steel needed a bit more effort. Reclaimed steel profiles were re-painted. After the painting, they were similar to new profiles, except for few unnecessary bolt holes and weld marks. (Sergio & Gorgolewski.)

3.6.2 London 2012 Olympic Park, demolished steel portal frame

For London Olympic Games in 2012, 2.5 km^2 area in East London had to be redeveloped to be the Olympic Park. Located near River Lea, the area was a transportation link and had strong industrial concentration. There were over 200 buildings in the area that had to be demolished. 90 % of the demolition material had to be reused or recycled based on the target set by The Olympic Delivery Authority. (Bioregional 2011.)

The steel portal frame used to be warehouse with dimensions of 100 x 32 x 7 meters. Building was about eight years old and was in terrific condition. Total material weight was 190 tonnes, with 163 tonne of structural steel and steel cladding. Building's deconstruction was made very carefully by reclamation specialist targeting to recover whole building and accessories. Deconstructing process started with thorough labeling of every structural element. After labeling the order of deconstruction was following: 1. roofing and cladding, 2. purlins and grits, 3. trusses and 4. columns. Structural stability had to be concerned before removing trusses, so crane was positioned to support the weight of each truss. Columns had to be supported with crane before anchor bolts were cut. The dismantling process took about 3000 working hours. Dismantling contractor was sure that similar building could be dismantled in 2000 hours, if the logistics were not as complex as they were in this project due the large scale of the whole project. (Bioregional 2011.)

This case project taught that steel portal frames are very suitable for reuse, even though they are not even designed to be reused or deconstructed. Projects had extremely tight deadlines and time constraints but still reclamation of all steel portal frame buildings of Olympic Park was a success. Case projects report stated that there might be advantages for both reclamation contractor and demolition contractor, depending on the price of scrap steel. According to report, there is a clear opportunity to expand reclamation sector. (Bioregional 2011.)

3.6.3 University of Toronto Scarborough Campus (UTSC) Student Centre

UTSC student center is a 4700 m^2 floor area building with three floors. The building consists of 300 tonne of structural steel of which 16 tonnes were reclaimed from deconstructed gallery building. (Edmonds, Straka & Gorgolewski.)

When the project began, the client wanted to make a sustainability plan that would consider building's sustainability long-term, serving present and future students in best possible way. Sustainability plan had objectives that were respected by the design team. Design team used these objectives and LEED system as the green guideline of the project. Sustainable designing workshops were held by consultants and clients to recognize different opportunities to achieve sustainable building. Possible reuse of materials – especially timber and steel – came up in these workshops. (Edmonds, Straka & Gorgolewski.)

There were some challenges in finding reclaimed steel suitable for the Student Centre. There were neither suitable demolition processes nor existing reclaimed steel components found. Fortunately, a demolition of gallery wing in Royal Ontario Museum (ROM), which was thought to be source for crushed concrete, included also suitable steel profiles for Student Center. Structural characteristics of reclaimed components was easy to define since ROM had kept original structural drawings of the deconstructed wing and Student Centre's engineering consultants had designed the original ROM gallery wing. The design team had huge amount of luck with reclaimed components in this project, but the project gives us a lesson that *it is very important to organize and store original drawings for components* if they are designed to be reused. (Edmonds, Straka & Gorgolewski.)

Since the reclaimable steel in ROM supported two composite floors, salvaging the steel needed some efforts from demolition contractor. In addition to cutting the steel components, deconstruction contract included also delivery to workshop where components were cleaned, fabricated and painted. Workshop was nearly 50 km from the site so design team were anxious that the transporting would increase environmental affects and cost too much. To minimize this risk, reclaimed steel went straight to fabricator from demolition site. There were some problems in demolition site that caused further problems with time schedule. Delivery to fabrication was delayed and it questioned the whole reuse process, but eventually all went as planned. Fabrication needed a little extra effort since the composite floor shear stud connectors and other extra attachments were removed, but it did not affect the project. The erection of reclaimed components went very well, because the steel was fabricated with mechanical connections. (Edmonds, Straka & Gorgolewski.)

Design team were lucky to find source for reclaimed steel, but because the source was also in middle of a project, it created a larger problem in time constraints. Student Centre project became dependent on the ROM demolition project. It would have been extremely important to synchronize timetable of the projects but there were only few opportunities to do that. Reclaimed steel components were used as columns and beams in Student Centre. Especially beams were large for their new application so this led to little adjustments and redesigning of the structural frame. Reclaimed steel components remained signs of former use - like gusset plates, stiffener plates and bolt holes - but architects of the project would have wanted the signs to be even clearer. Eventually, because all the difficulties faced, the project did not achieve economic benefits by using reclaimed steel. However, reused steel helped achieving clients demand of long term sustainability so altogether, using reclaimed steel was a success. The project offered lots of valuable lessons for

further development of steel reuse: Designing should be flexible, timing is important, proper documentation helps to identify structural characteristics, fabrication is harder to price with deficient information, quality control is needed in deconstruction and supply chain for reclaimed steel is needed in construction industry. (Edmonds, Straka & Gorgolewski.)

3.6.4 Roy Stibbs Elementary School

In 1993, Roy Stibbs Elementary School lost a classroom wing in fire and there was a need in the community to build a new one as fast as possible. The building was not entirely devastated in the fire, so the project included 2500 m^2 new construction and 1000 m2 renovation. The architects appointed to the project had also designed Cassiar Secondary School, a steel structured school in the same area which had recently been deconstructed. After dismantling, Cassiar's steel components were stored for further reuse, so architects knew there was source of reclaimed steel nearby. Due to extremely tight schedule, architects brought up the idea of using reclaimed steel in Roy Stibbs Elementary School. Client approved the suggestion and the new school was designed with reclaimed steel. (Straka & Edmonds). First thing for the design team was to inspect, whether the project was feasible with the stored structural steel. In their visit to storage they noticed that steel was generally in good condition. Structural characteristics of deconstructed steel was easy to find out from the original drawings and documents of Cassiar. New building adopted both the structural grid and interior layout from Cassiar to facilitate and maximize the reuse. Approximately ¾ of the steel used in Roy Stibbs School were reclaimed steel. Fabrication of reclaimed steel was also quite simple because steel components were generally in good condition. Steel components only needed some bolt hole filling, grinding and removing the fire proofing. (Straka & Edmonds.)

Biggest challenge in designing was the change of seismic zone. Seismic load requirements were about two times higher in new location. Both new foundation and bracing needed to be designed to resist higher seismic forces and overturn more efficiently. Luckily, original school was designed to 2.5 times higher snow loads. (Straka & Edmonds). In project's structural engineer's opinion, the biggest issue was the tight schedule of the project, but clearly design team tackled this problem. Building was built in under 7 months and less than a year after the fire. The most important part was that there were reclaimed steel in store, because it is extremely hard to match the schedules if construction is dependent on demolition project. This project shows how adaptable steel is and therefore has excellent potential to be reused. Steel components were quite easily modified to fit new requirements. (Straka & Edmonds.)

3.6.5 Summary of example projects

Example projects prove that previous publications on reuse challenges are quite accurate. Deconstruction, defining structural properties, availability of reclaimed steel, limited supply chains and designing were recognized as challenges in both previous publications and example projects. To overcome these challenges strong commitment and cooperation is needed from all interest groups. Successful reuse project is a sum of many variables that need to work all at once. Case project of this report differs from example projects above, since it is going to be designed from new steel components. Challenges recognized in reuse projects are the pitfalls that should be avoided in designing for reuse. Case project will include designing for deconstruction which is a pre-emptive method to solve challenges in reuse.

4. Case designing

Literature review pointed out that construction industry consumes lots of natural resources and generates too much waste. Decision making in designing phase determines the amount of waste produced in demolition. In early phases of projects, designers should be thinking of how buildings will be demolished. Little extra effort and small adjustments made in designing phase might change the way buildings are provided in the industry. Moving towards closed-loop systems and circular economy, existing buildings should be valuable resources for future buildings. (Gorgolewski 2006.)

In this chapter, case project will be designed for reuse. Designing is based on observations in literature review, but since there are no examples of reuse designing in Finland, designing will rely on heuristic methods. Designing will be made with an existing example building so chapter will start with introducing the example building. After the introduction, chapter will carefully go through the whole designing process and justify the decisions made in designing.

4.1 Introducing the example building

Example building for case designing is an existing storehouse building located in Tampere, Finland. Building is rectangle shaped hall building with length of 41 750 mm, width of 31 500 mm and height of approximately 10 000 mm. Building has steel frame, with hollow sections as columns and hollow section trusses as main support in the middle and beams in the end of the building. Distance between frames varies from 5000 mm to 7000 mm and in both ends of buildings there are six columns with 6150 mm distance between them. In lateral direction, building is stiffened with rigid frames and in longitudinal direction, braces are used in both wall and roof to transfer horizontal wind loads. Building has load bearing corrugated sheets in the roof, which also act as a horizontal buckling support for top chords. Wall consists of sandwich panels, that works both as an insulation and as façade. In addition to storage spaces, there are business premises inside the building. Business premises include meeting rooms, offices and social premises. Screen captures from existing building's information model are shown in pictures 2 and 3. Picture 2 shows the entire building with skin and picture 3 shows the frame of the building.

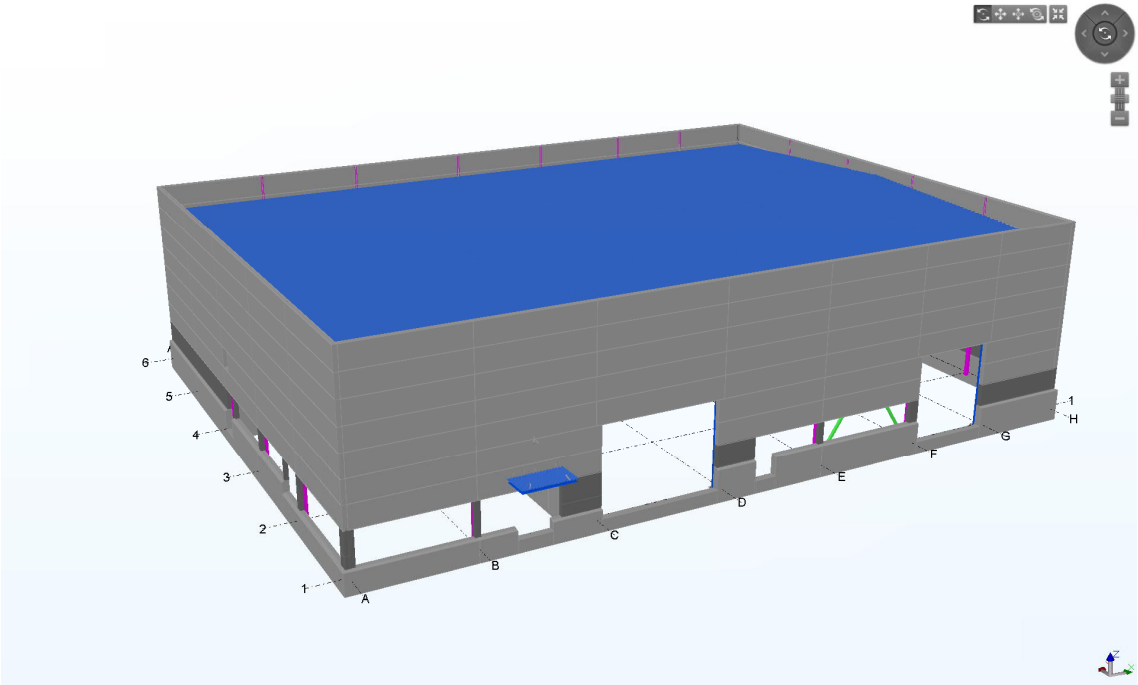

Figure 2 Screen capture of existing building's information model.

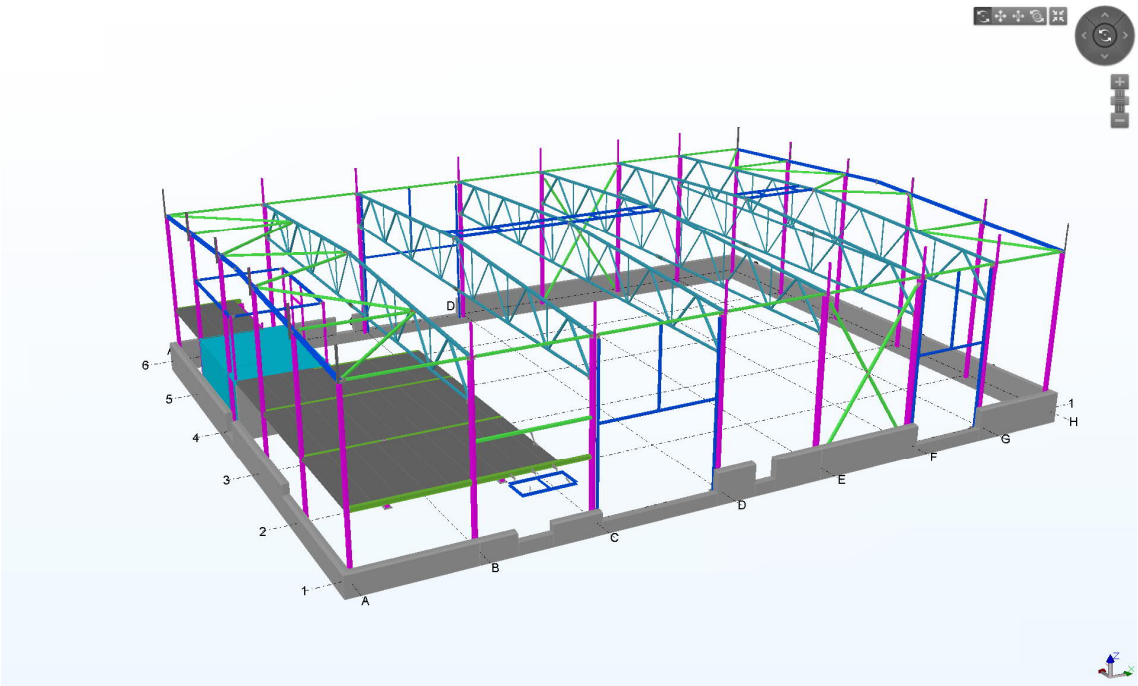

Figure 3 Frame of the existing building.

4.2 Example building and DfD principles

First state of designing the case project, is inspection of the existing building. Aim is to find out how well the existing building follows the basic principles of designing for deconstruction and how well the components are applicable to reuse. It can be assumed that inspection will help decision making in designing phase.

Simplicity, transparency and regularity: With rectangular shape, building has very simple geometry. Since the building is not designed to deconstruction, sections vary a lot in the building. For example, there are four different sections within building frame columns. Some of the columns have same diameter in both directions, but different thickness. It is very difficult to divide components with these minimal, yet important difference between them. Frame distance is not regular in the building which leads to dissimilarity in longitudinal building components and again challenges the sorting process a bit. It is also tougher to find reuse applications for same components since they have quite a lot of differences, because of the difficulty it causes to designing.

Connections: Connections are mainly standard bolt connections. The number of bolts, dimensions of connecting plates and rotation of connecting plates varies in different parts of the building with same structural components. For example, connecting plates of braces might be vertical in the other end and horizontal in the other end of the component. This does not affect deconstruction, but it might complicate reuse of components. Dissimilar connection plates are shown in picture 4. There are few frame components connected to top chords with welds. Welded connections need to be cut off so it will certainly complicate dismantling and might also damage components.

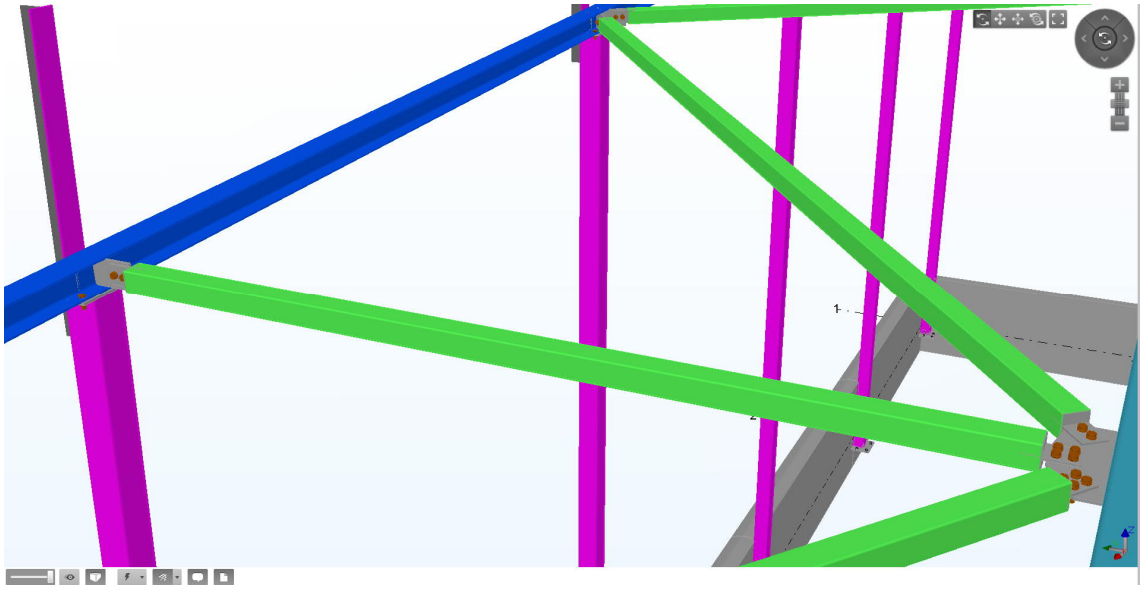

Figure 4 Dissimilar connecting plates in braces.

Amount of material grades: There are many different material grades, but mainly two different yield strengths: 355 MPa and 420 MPa. Inside the building there are columns with same length, but different material grade and section. Variable material grades make deconstructing inefficient,

increases the possibilities to mistakes when dividing components and complicates component reusing.

Flexibility and adaptability: Building has long span so it is quite well adaptable to changes. Corrugated sheets are used as buckling support for top chords so some problems might occur if modifications should be done to the roof.

Inspection gives a good picture of how easily the existing building would be dismantled. Based on literature review, there would be no insuperable reasons to dismantle the building, but it would require a lot of time, effort and money. It would be difficult to find reuse applications for dismantled components, because of the number of different dimensions, material grades, sections and connection details.

4.3 Adjustments

Target of designing is to create solutions that improve reuse possibilities of structural components in the end of building's lifecycle. However, designing should also consider the possibility of reusing the whole building in another location. Example building was inspected in the beginning of chapter four and the inspection showed that there is a need for changes in different sectors of structural designing. Following chapters will introduce the adjustments made for the building to achieve better reuse possibilities for structural components and the whole building.

4.3.1 Architecture

Hradil et al. (2014, p. 50) pointed that tight cooperation with client and the design team is extremely important when designing for deconstruction and reuse, so usually project would start with intensive communication between these parties. Deconstruction plan should be designed by both architect and structural engineer.

Building's regularity is an important factor when designing structural components for reuse. Irregular distance between frames leads to irregular length of longitudinal components which affects negatively on reuse possibilities and component sorting when dismantling. Designing is targeting to repeatable solutions, so there is a need to determine standardized measure of length for reuse designing. If project is designed with general profiles and standardized measure of lengths, solutions are easier to repeat. Case project exploits following standard lengths: Main length is 6000 mm and assistant lengths are 3000 mm and 9000 mm. All structural components aim to follow these lengths so buildings dimensions should be dividend with 6000 mm. Nearest multiples of 6000 mm are 42 000 mm length and 30 000 mm width. This is ideal solution which does not concern the limits set by for example site boundaries. However, in this case, changes in dimensions are relatively small so it would probably be practicable. It means that distance between columns will be 6000 mm in both sides and ends of the building. Other architectural change is made for the roof pitch which is changed from 1:20 to 1:10, because optimal angle of gradient for truss is 1:8…1:10, so it is assumed that 1:10 is more common roof pitch (Ongelin & Valkonen 2016).

4.3.2 Loads

Snow load in the ground in Tampere is 2.5 kN/m^2 (RIL 2008, p. 92). Building's terrain class for wind load is III. Terrain class in question features areas with vegetations, buildings or other obstacles

blocking wind (RIL 2008, p. 127). Loads need to be increased a bit, that the building is possible to move to new location without reinforcing the structural components. Adjustments made to live loads are shown in table 3.

Table 3 Differences in live loads between existing building and case design (RIL 2008).

Building	Existing	Case design
Snow load in ground	2.5 kN/m^2	3.0 kN/m^2
Terrain class for wind load	III	I
Dynamic wind pressure (z=11,5 m)	0.5 kN/m^2	0.79 kN/m^2

Designing was decided to be done with snow load of 3.0 kN/m^2, since it will cover almost entire country, apart from small areas in Lapland and Kainuu. Terrain class was chosen to I, which allows the building to be reused in expansive areas with no obstacles for the wind, like harbours. These changes enable reusing the whole building nearly everywhere in Finland.

4.3.3 Structural system

To improve reuse possibilities, it is important that building's structural system follows the basic rules of designing for deconstruction. Example building already has quite common and understandable structural system so there is no need for enormous changes in structural system. Theory of time related building layers was introduced in literature review and it divided skin and frame in different layers because of different expected service life. In terms of deconstruction it is important for building's frame to work as self-supporting structure without leaning on to related structural elements (Talja 2014, p. 9). Dismantling and changes are easier to execute if frame is working as self-supporting structure. Based on this, the case project will not use load-bearing sheets as buckling support. Insteas, braces are used as top chord buckling support. When the corrugated sheets are only working as vertical support for snow loads, the building will be more adaptable for changes, different building layers are clearly apart from each other and frame will be self-supporting.

Changes will also be made in building's stiffening plan. Example building has rigid frames where trusses are connected from both top and bottom chord. Building is stiffened in lateral direction with these rigid frames. Roof is stiffened with braces only in longitudinal direction. In case project designing both directions will be stiffened with braces in roof and wall. Thus, roof truss connection

to columns will be hinge joint. Stiffening plan bases on the solutions presented in Finnish EC3 textbook (Finnish Constructional Steelwork Association 2014, p.120). Basic principles of building's stiffening are shown in picture 5.

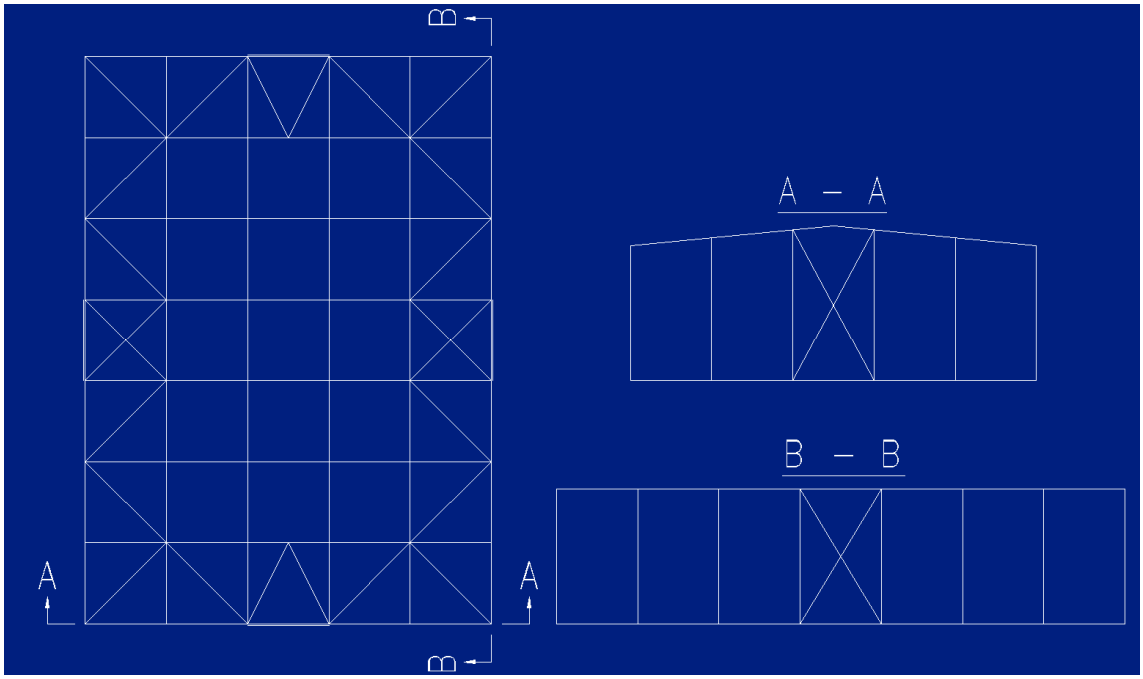

Figure 5 Basic idea of stiffening plan in case designing (Finnish Constructional Steelwork Association 2014, p. 120).

Adjustments made in the structural system aim to more common solutions and easier deconstruction. Sheets will be used as load-bearing structure in the roof and they add some capacity to the stiffness of roof, but this capacity will not be exploited in calculations.

4.3.4 Building components

The example building features mainly different types of hollow sections with different material grades. Cross sections and grades included in different components of building are listed in table 4.

Table 4 Cross sections and material grades in example building.

Component	Cross section(s)	Steel grade
Frame columns	200x200x6, 200x200x8, 300x200x8, 300x200x10	S420MH
Columns inside	120x120x4, 180x180x6, 200x200x6, 200x200x8	S355J2H, S420MH
Top chord	150x150x8	S420MH
Bottom chord	120x120x8	S420MH
Diagonal/vertical bars	70x50x4, 80x80x5, 100x100x5, 120x120x8	S355J2H, S420MH
Braces	120x120x4, 140x140x6	S355J2H
Frames etc.	100x100x3, 120x120x4, 150x100x4	S355J2H
Beams	HEA180	S355J2
Corrugated sheet	T130-75L-930-08, T130-75L-930-10, T130-75L-930-12	S350GD+Z

The existing building has clearly been designed with economical optimization as the main issue. However, economical optimization does not usually follow DfD principles very well. In this case, dismantling the components would take a lot of effort and it would not be easy to find reuse applications for the components. In terms of designing for deconstruction and reuse, regularity is also the main point in cross sections and material grades. Therefore, all steel used in case designing will have the same yield strength of 355 MPa (except for corrugated sheet and clip angles in detailing) and all cross sections within singular component will be same. Using same profiles and material grades leads to overdimensioning in some components, but the benefits are explicit. Good example of overdimensioning are vertical and diagonal bars of trusses. If all the profiles and material grades of bars are the same, there is rather large overdimensioning in the middle of the truss as bar forces are bigger near supports. The main reason to use similar profiles is that the building has gable roof so truss is probably made of two pieces. If diagonal bars are strong in the middle of the truss, it is possible to reuse the truss in single pitch roof with half the span length without adding reinforcements to bars. There is also one reason of minor importance that promotes this decision. If there are no reuse applications found to the truss, it can be cut to pieces and in that case, similar cross sections and material grades improve possibilities for reuse applications. Overdimensioning singular web bar does not affect greatly to steel consumption in whole truss (Ongelin & Valkonen 2016, p. 425).

Preliminary plan is to use hot-rolled I-sections as columns and building end beams. Assumption is that detailing is easier with I-profiles, so that is the reason for choosing them as column sections. Top chords, bottom chords, diagonal bars, braces and frames will be cold-formed tubular sections. Hollow slab levels inside will be supported by WQ-beams. Aim is to use standard, common and well-known profiles. Material grades used in the project should also be common. Finnish constructional steelwork association has put together a document which lists different steel products, recommended material grades and profiles or material thicknesses for those products. Material grades for hot-rolled plates and I-sections is recommended to be S355J2G3, for hot-rolled and cold-formed tubular sections S355J2H and for WQ-beams S355J2G3. (Pellosniemi & Kalamies.)

One target of this report is to consider solutions for improving reuse possibilities of corrugated sheets and sandwich-panels. Load bearing corrugated sheets come in various thicknesses, and in Finnish markets, thinnest load bearing sheets are 0.6 mm and thickest are 1.5 mm. Dismantling thin-film products without damaging them is very difficult, so efforts made in the designing phase, might not be worth the trouble. Nevertheless, existing building has three different thicknesses amongst load bearing sheets, so first decision would be using one similar thickness in the case project. Using thicker sheets might raise possibilities of dismantling sheets undamaged. Existing building has double overlap joint which can be assumed as continuous structure. It enables thinner sheets, but also requires screw or nail connection in the web of sheets. From the perspective of reuse and deconstruction it is better to have fewer holes in the sheets. If possible, it would be better to use different kind of detail in case project, like for example longer sheet with two span system. These alterations make sheets similar, more durable and simpler.

There are basically two attributes that can be changed in sandwich panels; length and connection details. Building's layout was previously decided to more regular system with same distance between columns around the building. Regular distances lead to regular length in sandwich panels (except corner pieces), which simplifies deconstruction and reuse. Second alterable attribute is connection details. Webster & Costello (2005, p. 8) recommended exploring clamped friction connections to minimize modifications to a component. Sandwich panels might be suitable alternative to develop

such details, if the details do not bother work in construction site too much. Aim is to find appropriate solution in designing phase.

4.4 Loads

Building's loads consist of self-weight, snow and wind. Previously it was decided that design snow load would be 3.0 kN/m^2 and terrain class would be I. Assumption is that case building will be 11.5 m high, so dynamic wind pressure is 0.79 kN/m^2. Building's strength calculation will be performed with Autodesk Robot Structural Analysis professional. First, we need to establish line loads from self-weight, snow and wind to columns, top chords and end beams.

Roof is composed of load-bearing sheets, heat insulation, steam stop and water proofing. Preliminary decision is that corrugated sheets will be Ruukki's T153-40L-840-15. Existing building has 400 mm of mineral wool as heat insulation and same solution will be used in case project. Self-weight for roof is calculated in appendix 1. Based on calculations, self-weight for case building's roof structure is 0.761 kN/m^2. Distance was 6 m, so line load from self-weight for end beams is 3 m*0.761 kN/m^2 = 2.3 kN/m and for top chords 6 m*0.761 kN/m^2= 4.6 kN/m.

Formula (1) determines the snow load for roof (RIL 2008, p. 94)

$$s = \mu_i * s_k \qquad (1)$$

Where s is snow load of roof [kN/m^2], µi is shape coefficient, and s_k is snow load in ground [kN/m^2].

For gable roof with under 30° angle of gradient, µ1 is 0.8, so snow load for case building's roof is 2.4 kN/m^2. Line load for end beams is 3 m*2.4 kN/m2=7.2 kN/m and for top chords 6 m*2.4 kN/m^2 =14.4 kN/m.

Wind load is determined with the instruction given by RIL 201-1-2008. Instruction determines a total wind load for building, which can be determined either with wind force coefficient method or with wind pressure coefficient method. Total wind load is used designing the frame structure of the building and sub-area wind loads are used in designing connection details. Wind force coefficient method assumes that wind pressure in all heights is same as the value of roof's ridge. This assumption can be made when building's height is smaller than width. Building's total wind load with wind force coefficient method can be calculated with formula (2)

$$F_W = c_s * c_d * c_f * q_p(h) * A_{ref} \qquad (2)$$

Where F_w is total wind load [kN], cscd is structural coefficient, cf is force coefficient, $q_p(h)$ is dynamic wind pressure, and A_{ref} is reference area of wind load.

Exact wind load calculations are presented in appendix 2, but results are shown in picture 6.

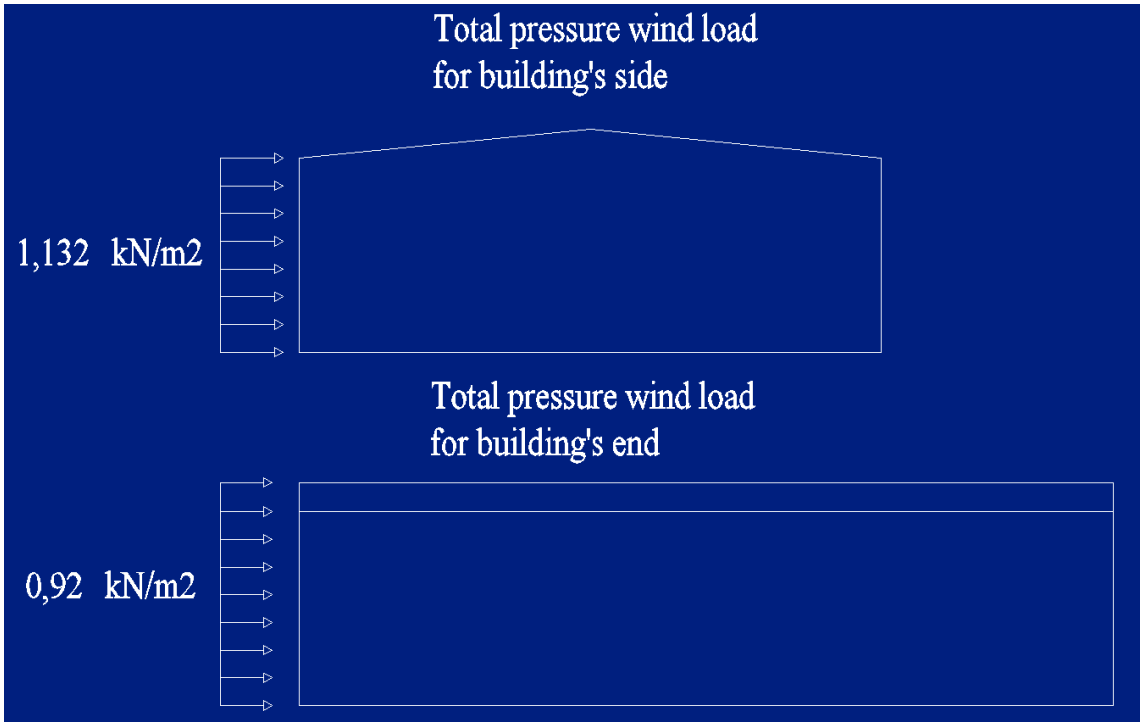

Figure 6 Building's wind loads.

Furthest columns will receive loads from 3 m area, and rest of the columns will receive loads from 6 m area. When the wind blows from the side of the building, uniform load for furthest columns is 3 m*1.132 kN/m^2=3.40 kN/m and for the rest

6 m*1.132 kN/m2=6.79 kN/m. If the wind blows from the end, furthest columns will receive 3 m*0.92 kN/m^2=2.76 kN/m uniform load and rest will receive

6 m*0.92 kN/m^2=5.52 kN/m uniform load.

4.5 Preliminary design

After the loads are determined, preliminary design can be started. Design is started by defining trusses. Depending on reference, optimal height for trusses is L/9…L/16, where L is the span length. Span length in case project is 30 m, thus height of trusses is decided to L/10=3 m. Ratio between web bars and chords should be around 0.7 – 0.8 (Ongelin & Valkonen 2016, p. 425). Previously it was decided that every web bar has the same cross section. Trusses type is decided to K-truss, because it is simple, cheap to manufacture and is spacious. Sparsely placed bars give better opportunities for HPAC lead-in (Ongelin & Valkonen 2016, p. 427). Angle between web bars and chords should be limited to the minimum of 30° to simplify welding in workshop (Ongelin & Valkonen 2016, p. 431). Distance between web bar joints is constant and since the angle was limited to a minimum of 30°, the distance is 3750 mm. Preliminary cross sections for trusses will be following: top chords 200x200x10, bottom chords 160x160x6 and web bars 140x140x5. Previously it was decided that I-sections would be used as columns and end beams. Preliminary decision, based on loads is that HEA240 will be used as columns, HEA180 as end beams and 120x120x4 as wall and roof braces.

4.6 Calculations

Required information has now been established for calculation model. Main issue in this report is the reuse designing so calculations are made approximately targeting to prove that the chosen profiles are durable enough. Only column splices and brace connection will be calculated in this report, because they are most common connections and have most influence in plate and fastener quantities. Other connections are designed approximately based on example building and common practices in construction. In calculation model, all columns are connected rigidly in foundations and truss connection to columns is hinge. First calculations showed that there is a possibility to decrease the amount of roof braces. Therefore, braces on the other side of the roof were removed to increase utilization ratios and decrease steel kilograms. Utilization ratios after brace removing were following:

- Columns: 0.36 – 0.86.
- End beams: 0.66 – 0.67.
- Diagonal roof braces: 0.17 – 0.89.
- Horizontal roof braces: 0.07 – 0.40.
- Wall braces: 0.39 – 0.55.
- Top chord: 1.06 – 1.11.
- Bottom chord: 0.83.
- Web bars: 0.07 – 0.62.

Screen captures of final calculation model are shown in picture 7.

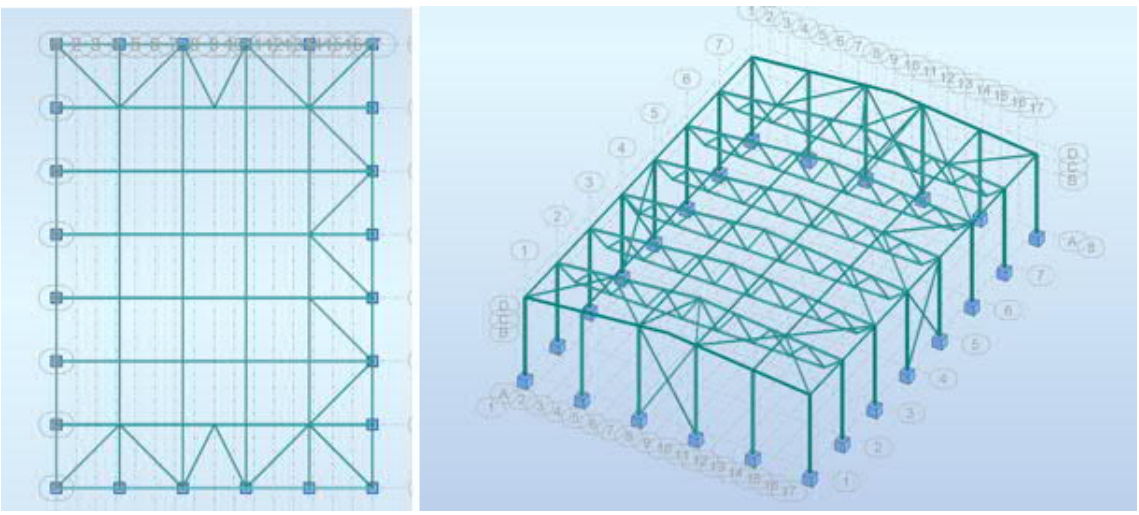

Figure 7 Case project calculation model.

Utilization ratios of top chords exceeded slightly in calculation model, but further consideration with manual calculation proved that cross section is correct with utilization ratio of 0.97. Difference was found in interaction parameter¬ which affected utilization ratio in interaction equation. Value for interaction parameter in calculation model was 1.50 and in manual calculation it was 1.005. Manual calculation for top chord is shown in appendix 3 and calculation report from Robot is presented in appendix 4. Utilization ratios for different components are shown in appendix 5. It can be observed from utilization ratios that the decision to use same cross sections in same components contradicts

quite a lot with optimization. Consequently, first phase investment value grows a little, but for the sake of reuse and deconstruction, this compromise must be made.

Corrugated sheets are calculated with Ruukki's design tool for load bearing sheet – Poimu. Standard in program is EC3, with Finnish National annex. Roof's self-weight without corrugated sheets is 0.51 kN/m2+0.045 kN/m2=0.56 kN/m^2. Self-weight calculations were presented in appendix 1. Characteristic value of roof's self-weight, snow load and wind load from every direction were set in the program. Before calculation supports and joints need to be defined. Based on DfD principles, it is better to have smaller number of large components than larger number of small components. Thus, two span system will be used in corrugated sheets in the first six spans. Longitudinally, four corrugated sheets will cover the whole roof and overlap joints will be needed only in the last span. Suitable sheet type was T130M-75L-930 and thickest section in the results was 1.5 mm, so it will be used as corrugated sheet in the roof. Even though it is moderately more expensive, screws should be used as fasteners between main support and corrugated sheets. It would be extremely hard to dismantle sheets undamaged if nails were used as fasteners. In this project, self-tapping tempered screws TDB-T-T16-6.3 are used in support fastening and SL2-T-A14-4.8-20 are used in end lapping and in side joints. Appendix 6 contains the calculation data of load-bearing sheets and fasteners.

4.7 Reuse designing

Approach to reuse design in this report bases on studies made of deconstruction designing and reuse in literature review. To recap, biggest obstacles for reuse recognized in previous studies were toughness of deconstruction; fixed, difficult and irregular connections; problems in designing with dismantled products and toughness to trace structural properties of dismantled components. Principles for DfD were: easily dismantled and transparent connections; deconstruction plan included in design phase; simple, transparent and regular building (as well as components); flexible and adaptable building; cooperation with different interest groups; low number of material grades and traceable parts, drawings and designs. Most of these were already considered in previous chapter, but this chapter concentrates on detailing.

Steel frames have lots of mechanical connections so they are already easily dismantled with non-destructive methods, as is the example building of this report. Bigger problem seems to be toughness of finding reuse applications as well as toughness of sorting the components in deconstruction work. Thus, case designing leans very strongly on regularity in connections, cross sections, lengths and material grades. Previously established standardized measure of lengths should be exploited in components in any possible situation. Same structural components should have similar connections everywhere in the building.

Welds in the components usually mean that it is harder to find reuse applications without remanufacturing. It is possible to remove welds, but it takes time, effort and money so better solution would be not to use them. Target is that main components (columns, beams and truss assemblies) of this report will not include any welds, only bolt holes and in best situation – universal bolt hole system. All the needed connections would be connected to these holes.

Steel framed buildings usually have a connection or two that are difficult and need specific detailing. For example, diagonal parts like wall or roof braces usually need difficult gusset plates that are not universal. Target of reuse design in this report is to maximize the amount of steel kilograms that are

applicable to reuse after deconstruction. This report approaches the problem with “expendable parts”. If difficult and rare gusset or connection plates are welded in to main components, either remanufacturing is needed or reuse possibilities are limited. Connection details should be bolted to main components and these connection assemblies can be “sacrificed” to recycling. Aim of this is to assure that bigger parts and components with the most weight would be easier to reuse while smaller components with more specific details and less weight can be recycled.

In a nutshell, biggest effort in reuse designing goes to main components. Target is that after dismantling, those components could be transported in to new application, storage or hardware shop without remanufacturing. Cross sections are already quite standard so if lengths and bolt hole systems would become standards, buildings frame could be assembled from standard parts.

4.7.1 Columns

Component reuse designing starts from columns. Main idea is to use previously determined standardized lengths and standard HEA240 profiles. Only processing done to a single piece of column is system bolt holes in both bottom and top end of the part. All connections in columns will exploit these bolt holes so there will not be any welded gusset plates, connection plates or stiffeners in the section. Building has intermediate level inside so supporting structure of the level will most likely be connected to columns. In example building, inside columns supporting the level are 3300 mm high and frame columns are 9200 mm high. In this report 3000 mm high column parts will be used as inside columns and bottom parts of frame columns. 6000 mm high column parts will be added with column splice to bottom part of frame columns to complete the demanded height. Bolt hole system will be determined by designing column splice and calculating utilization ratio for it.

Tentatively, splice connection consists of 10 mm thick plates and 8.8 M24 bolts. There will be one plate in each flange and each side of profile’s web. For M24, recommended edge distances are 50 mm to side, 60 mm to end and recommended distance between centres is 80 mm in both directions (Ongelin & Valkonen 2010, p. 319). If possible, (at least) these distances will be used in the splice. HEA240 flange width is 240 mm and flange thickness is 12 mm. Height of the profile is 230 mm so in profile’s web there is 230 mm-2* 12 mm=206 mm space to fit the plates and bolts. There is enough space for recommended distances. As it was decided, there will be no welds in the columns, so for example intermediate level support beam connection plates must be welded to some of the splice plates. It should be considered that (especially in webs) there is enough space to weld a connection plate between bolt holes. Sketch of column splice is shown in picture 8.

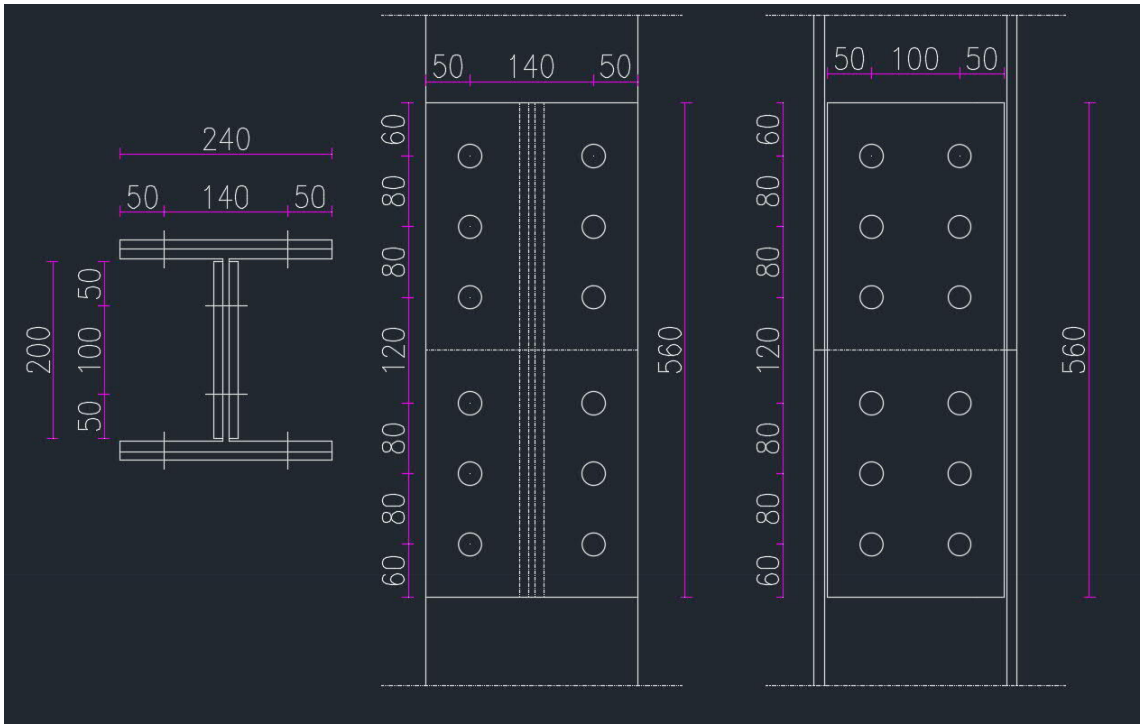

Figure 8 Sketch of column splice.

Since the splice is in 3 m height, column splice will be calculated with forces in 3 m height from the column with highest utilization ratio. Appendix 7 shows accurate calculation report of the splice connection.

Utilization ratio for the splice was 0.44 so splice is slightly overdimensioned. Even though splices are overdimensioned, they will not be reduced. There is a possibility to use total of 36 bolts, but if the loads allow, fewer bolts can be used in splices to decrease cost of connection. Example of column splice is shown in picture 9. Intermediate level beam connection to column splice is also shown in the picture.

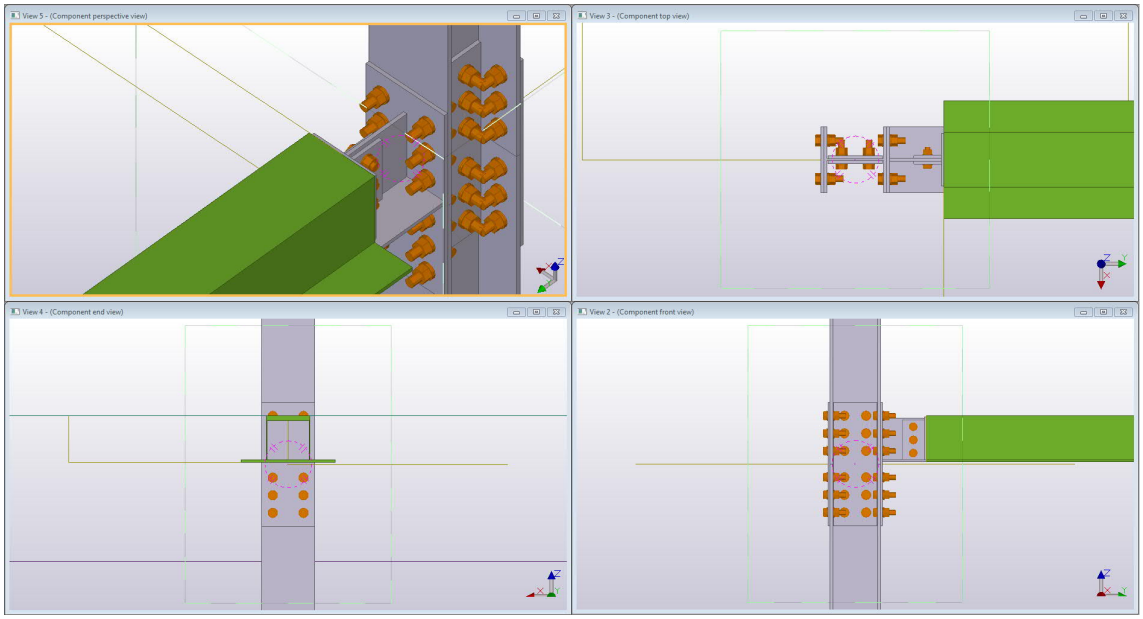

Figure 9 Example of column splice and support beam connection to splice plate.

Columns end plate and base plate will also be connected to standardized bolt holes. Trusses and braces can be connected to these assemblies instead of column profile. Picture 10 shows base and end plate connections. End – and base plate connections are not accurately calculated in this report. Plates in this report are raw versions which can be developed further. Estimation of plate thicknesses and number of bolts were made of splice calculations and example building.

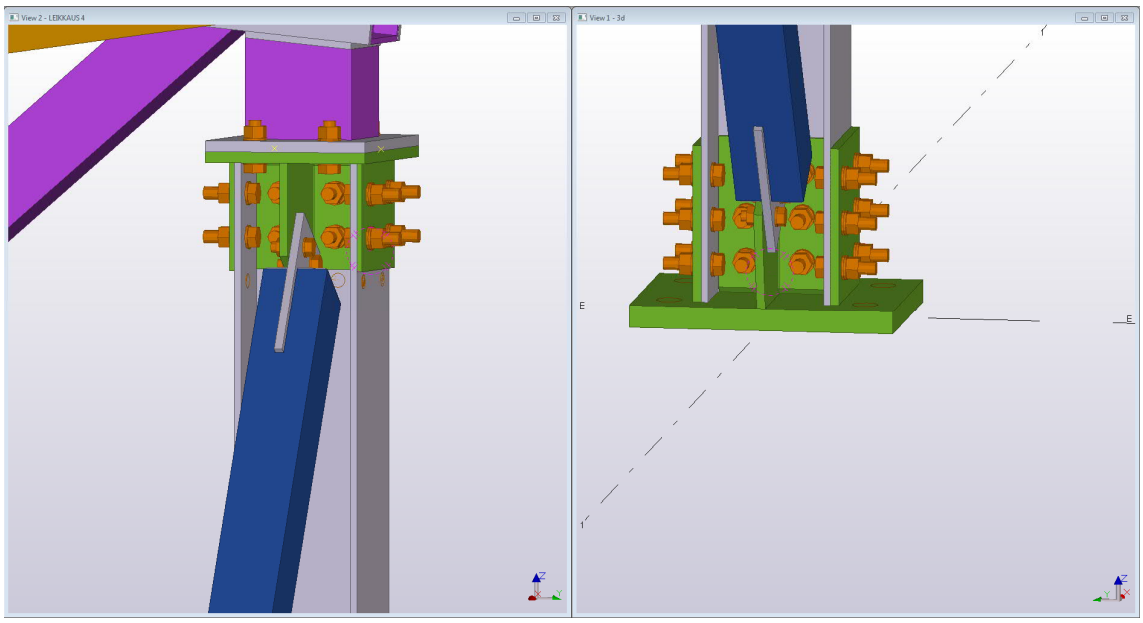

Figure 10 Columns base – and end plate connections.

Bolt hole systems could be standardized for different cross sections and in theory, this type of solution could make steel columns standardized building products.

4.7.2 Trusses

Theoretically trusses could also be assembled of standard length pieces. Piece could be rectangle with chords, two diagonal and two vertical bars. Diagonal bars would be in 45° angle. Different roof pitches would be possible if appropriate connections were developed. Picture 11 includes a sketch of possible pieces.

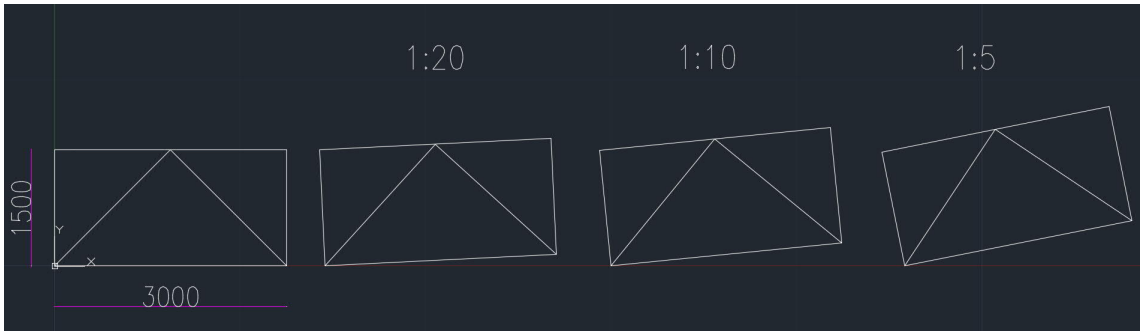

Figure 11 Possible standard truss pieces.

This solution is complicated for various reasons. Truss height depends on span length so with long spans, additional tension bar would need to be connected to truss. In completely universal solution, single truss piece could be located anywhere in truss. Thus, tension bar connection parts/plates would be needed in every truss piece. Connection to columns and splices in roof ridge would also be very difficult to design with this completely universal solution. However, separate support – and ridge pieces could be used to overcome this problem. If trusses were assembled from standard pieces, structural functionality would be hard to ensure and connections between pieces could be quite expensive. Toughness in designing led to choosing traditional truss system for the case project.

Case project trusses are assembled of two pieces with splices in the middle. Roof braces need to be connected to top chords of trusses. Welded gusset plates would affect reuse possibilities of trusses so gusset plates are bolted to top chord. Bolts go through top chords so two plates can be connected with same bolts. It is difficult to erect the plates to top chords because two plates must be supported at the same time as bolt are fed through top chord and plates. Custom-made U-profiles would facilitate installation work a lot but they would also complicate load-bearing sheet connection to top chords and increase material consumption. Increased consumption comes from the need of extra plates in plate assemblies and the need of add purlins to top chords. Therefore, decision is to use only plates instead of custom made U-profiles. To simplify work in construction site, plates will be connected to top chords in workshop. Example of gusset plate connection to top chord is shown in picture 12.

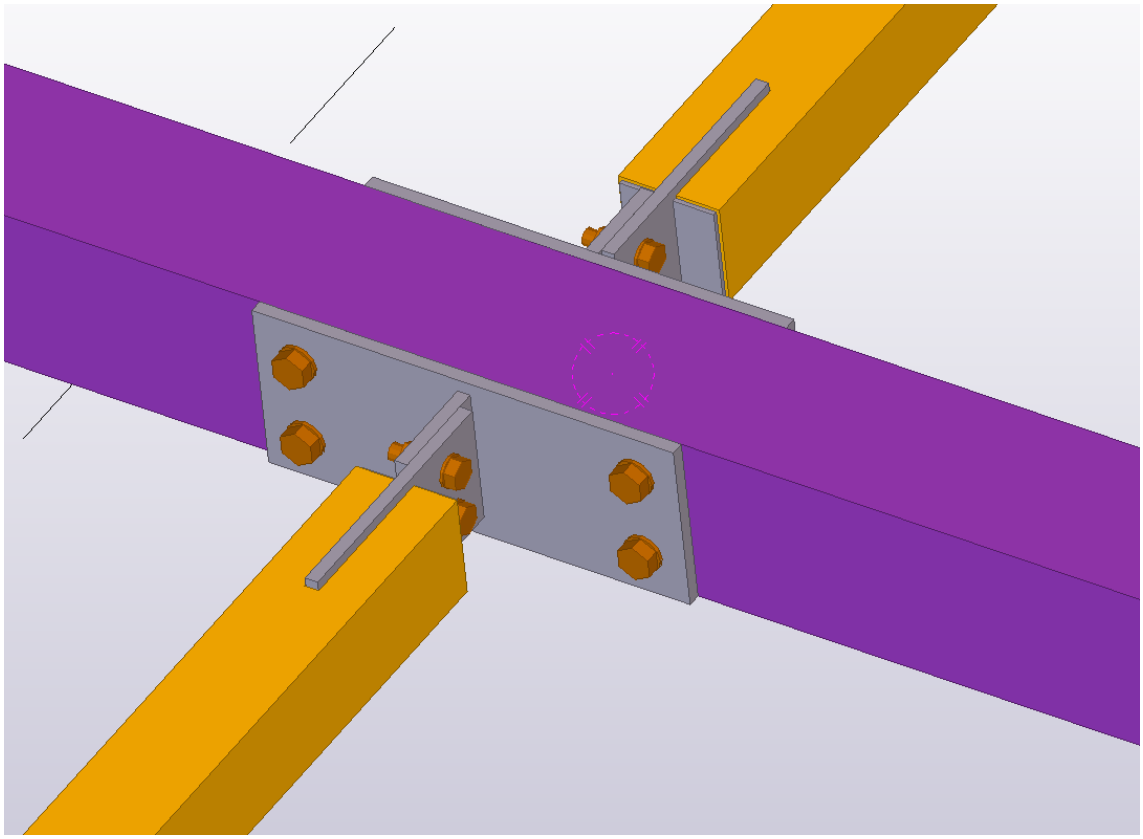

Figure 12 Gusset plate connection to top chord.

Every diagonal bar in the truss are from same cross section which gives the possibility to reuse half truss in single pitch roof. Reusing half of the truss would still need slight remanufacturing between applications since splice connections might not be suitable when connecting truss to column. Therefore, the highest levels of reuse (whole building or whole component without remanufacturing) are possible only if the whole building is moved to another location or new building has exactly same span length. Trusses still have lots of possibilities for reuse with slight remanufacturing. In addition to reusing half truss, truss halves can be cut shorter and used with shorter span length if new connection details are added to trusses in workshop. Truss parts (chords and diagonals) can be separated from trusses by cutting and afterwards can be reused in totally different applications. Picture 13 shows case projects trusses.

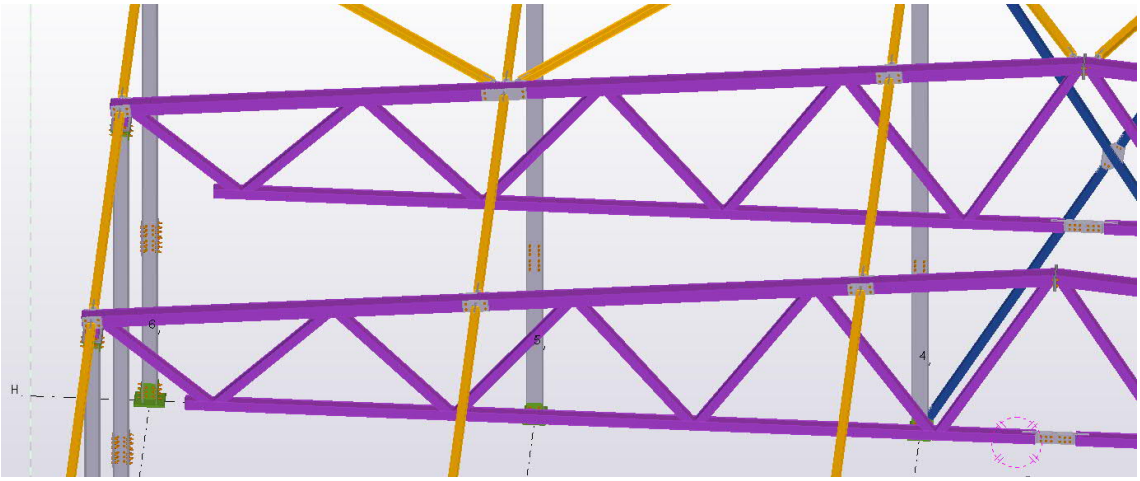

Figure 13 Trusses in case project.

Even though reuse possibilities are quite wide for regular truss, only from reuse perspective, the best possible solution for trusses (or any other component) would be assembling them from standard pieces. It takes lots of effort in designing and might not be very realistic short-term approach, so the idea was ruled out of case designing. However, further studies are definitely recommended. With appropriate connection details, ensured structural functioning and optimized splices, standardized truss pieces could be a suitable solution.

4.7.3 Beams

Case project building has beams in both ends of the building. First idea was to exploit same approach that was used with columns, but there were many obstacles challenging that idea. Because of the roof pitch, actual distance between beam supports is $(6000^2+600^2)^{0.5}$ mm ≈ 6030 mm. It means that beam connection to supports or brace connection to beams cannot be easily executed with standardized bolt holes. Other idea was to use small, “expendable” parts in both sides and in ridge. Picture 14 presents the solution with “expendable” parts.

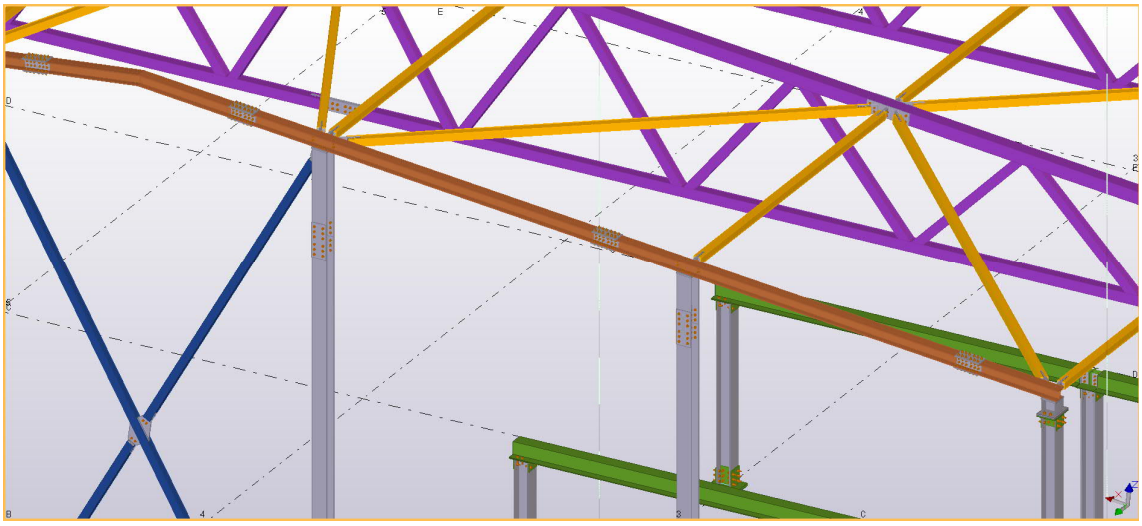

Figure 14 End beam with “expendable” parts and splices.

If case project would use beam parts with standard lengths, additional bolt holes would be needed in beam parts to connect beams to columns and braces to beams. Connecting load-bearing sheets to beams would also be more complicated. Since the building has so few beams, building would be a source for 8 pieces of 6-metre standardized beam parts (with additional bolt holes) after dismantling. Ridge parts and side parts could not be counted for reusable components. Solution is expensive, hard to execute and benefits are not explicit. Thus, case project will use a solution where both ends have one beam in each slope. Only welds in the beams will be end plate needed for beam splice. All other connections are bolted to beams. After deconstruction, there will be four pieces of about 15 meters long beams with some bolt holes and plates in one end. If the whole building is not moved to another location, slight remanufacturing is most likely needed with beams. Compared to solution with standard lengths and splices, using one beam per pitch increases the amount of possibly reusable steel kilograms, is economically advantageous and needs less work in workshop and in site. Only weakness in this solution is that it is not repeatable or universal but after consideration it was thought to be the best solution for case project. Picture 15 shows the final solution and gusset plate connection to end beam.

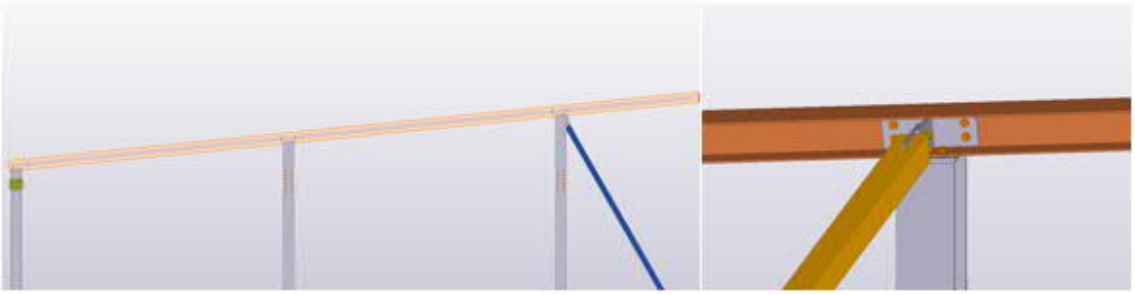

Figure 15 Eventual end beam and gusset plate connection to end beam.

4.7.4 Braces

With braces, reuse designing leans on regularity in connections and lengths. To achieve better reuse possibilities, braces have very general gusset plate connection details and every brace has identical connection details in both ends. Other important thing is that braces have same length. Every straight brace in the roof is 5500 mm long. Diagonal roof braces have two lengths: 6100 mm and 7850 mm. Building roof has 42 pieces of

5500 mm long straight braces, 13 pieces of 7850 mm long diagonal braces and 4 pieces of 6100 mm long diagonal braces. Roof braces are presented in picture 16.

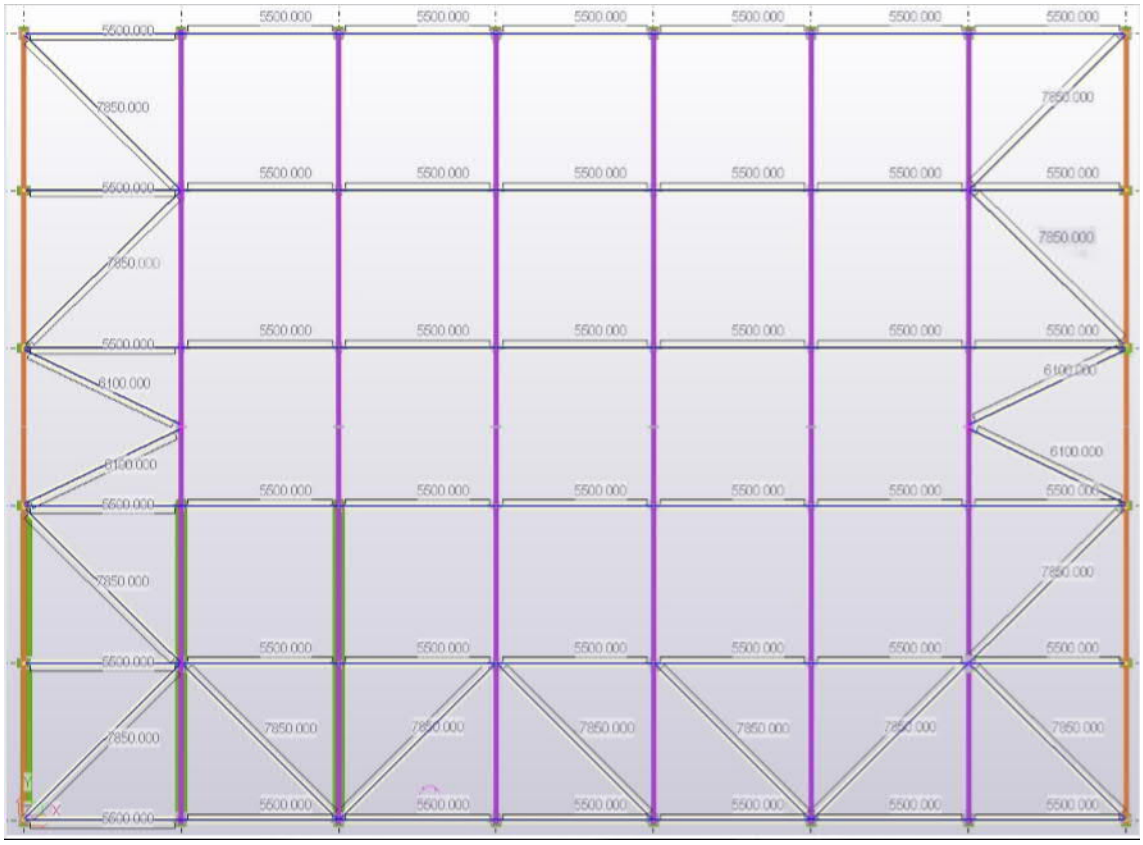

Figure 16 Regularity in roof bracing.

Wall braces depend on building height and roof pitch so they have variable lengths. There was a possibility to fit four pieces of similar 5500 mm braces in both ends of the building, so the possibility was exploited to increase amount to 46 pieces of similar braces. Other wall braces have different lengths and can be reused in building with same height and roof pitch but they can also be remanufactured and used in different applications. Building has altogether 12 wall braces with different lengths, but same cross section than roof braces. Even frame structure for vertical lift doors are made of same cross section than braces so depending on manufacturer's detailing, frame sections might also be available for reuse. After dismantling, building can be very valuable resource of hollow core sections for even larger demands. Wall braces are shown in picture 17.

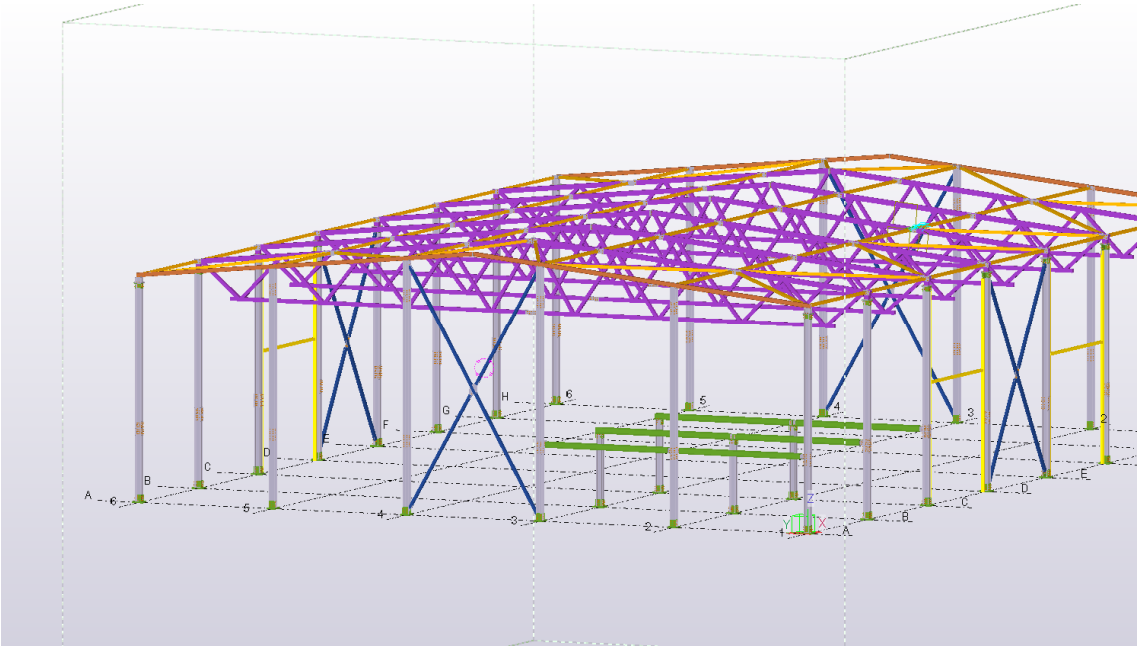

Figure 17 Wall braces.

Every brace in case project will be connected with gusset plate connection since it is common connection detail amongst braces. Gusset plates can be reused but in principle they are assumed to be “expendable” parts and therefore are bolted to main components. Main idea is to have as many similar brace assemblies as possible. If brace assemblies are similar, gusset plate dimensions are the ones that might have to vary. For example, braces in last frame span have one end connected to top chord and one end to beam, so gusset plates need to have different dimensions. Since the gusset plate connection is very general connection detail with braces, regularity in distances in different buildings is directly proportional to brace reuse possibilities. Bigger forces might require more bolts so maybe for more universal solution, connection plates would need to be bigger with more bolt holes. Calculations of gusset plate connection with biggest forces are shown in appendix 8. Case project’s gusset plate connection for braces is presented in picture 18.

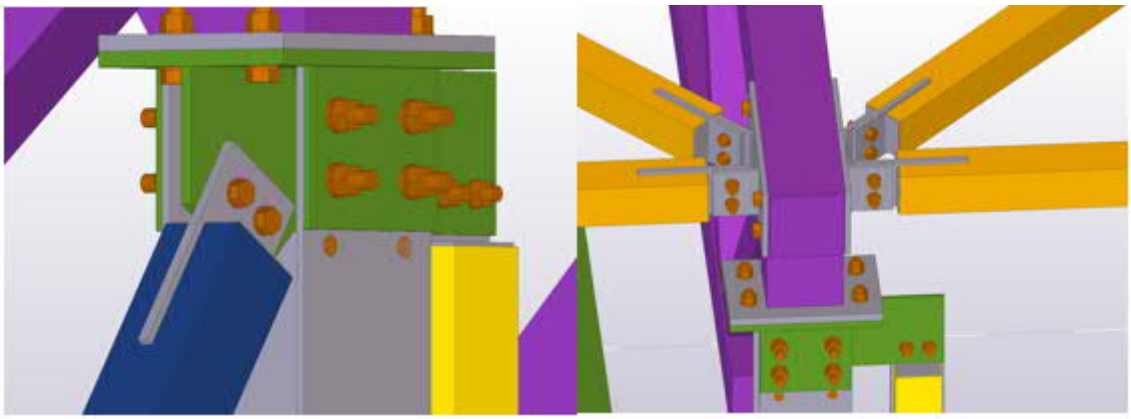

Figure 18 Brace connections in case project.

4.7.5 Load-bearing sheets

Reuse designing for load bearing sheets is complicated because design possibilities are very limited. Solutions can rely on same basis that has carried through this report: regularity, simplicity and easier dismantling. Building's dimensions were already modified, which is beneficial for load-bearing sheets too. Earlier in calculations it was established that load-bearing sheets use two span system because overlap joints lead to holes in the web of sheets and might complicate sheet reuse. Building has seven spans longitudinally so two span system can be used to cover six spans. Remaining span needs one span system. Unfortunately, standard end lap installation was not durable enough for case project circumstances, so simple overlap joint was needed in the one span sheet. It was decided that sheets should be 1.5 mm thick that it is easier to dismantle them undamaged. This leads to quite large overdimensioning, but it is assumed that solution might improve reuse possibilities. Last thing that is supposed to promote reuse of sheets, is the decision to use screws as fasteners instead of nails. Screws are little more expensive, but easier to dismantle. Load-bearing sheets in case project are presented in picture 19.

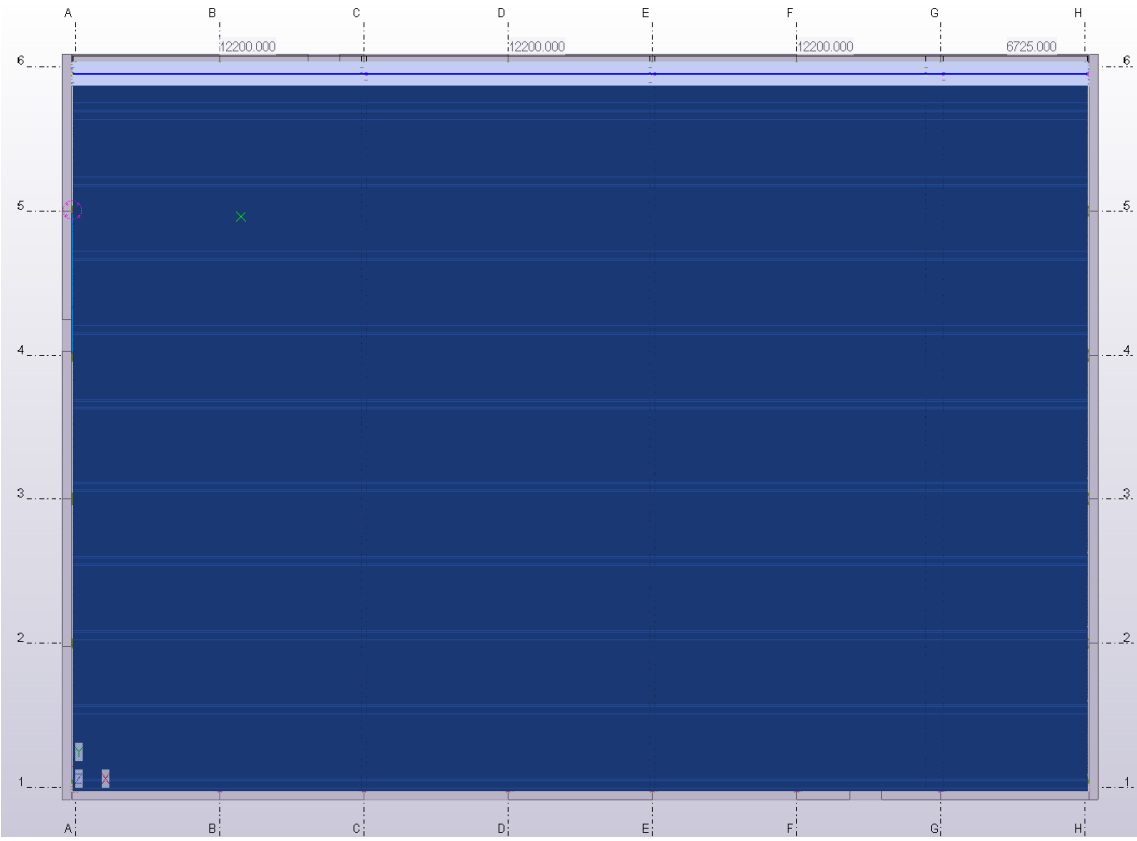

Figure 19 Load-bearing sheets in case project.

Detailing for load-bearing sheets is following:

- Side overlap will be standard side overlap.
- Static scheme will be 2-span system (A-G in picture) or simple overlap joint (G-H).
- Fasteners will be used in every other flange against support.
- Side laps need to have fastener with the spacing of c\c 500 mm.
- In simple overlap joint, each web needs to have one fastener.

4.7.6 Sandwich elements

Sandwich elements have good qualities for reuse designing. Width and connection detailing is quite standard in the industry. Alterations for sandwich elements is limited because basically two things can be changed: length and connection details. In case project, detailing sandwich elements is complicated because of previous decisions made in reuse designing. Column splices, base – and end plates have projecting bolts which are affecting sandwich element detailing. Detailing must also concern the reuse possibilities of sandwich elements since it was one of the targets in this report. To improve reuse possibilities, designing is targeting to find possibilities to exploit friction clamp connections for sandwich elements. Clamp connections would leave sandwich elements free from drill holes and it would lead to more universal possibilities for reusing sandwich elements.

Previously it was decided that columns would only have systematic bolt holes in bottom- and top ends, but due to complicated nature of sandwich element detailing, a compromise must be made. To avoid clash between bolts and sandwich elements, H-section will be connected to columns with drill screws and sandwich elements will be connected to H-sections. H-sections need to be cut in the area where splice connection is located. Corner columns need connection surface for column's web side, so L-section is connected to column flange. Sandwich elements in building's corners are connected in conventional way with element screws drilled through sandwich elements. Example building had parapet panels, so they will be used also in case project. Parapet panels improve reuse ratio for sandwich elements, because elements are similar from bottom to top. Necessary connection plates for parapet panels are welded in to columns end plate assembly. Sketches of possible sandwich element connection details are shown in appendix 9. Appendix contains three different versions of vertical joints for sandwich elements and all of them are clamp connections. Appendix also contains the detail for external corner.

4.7.7 "Expendable" parts

One of the main ideas of reuse designing in this report was the concept of "expendable" parts. These components can be reused as well as any other parts, but since they usually are quite unique plate assemblies, it can be assumed that they will be melted after deconstruction. "Expendable" components are exploited in different connection details to avoid welding to primary components. Picture 20 presents examples of different "expendable" components in case project.

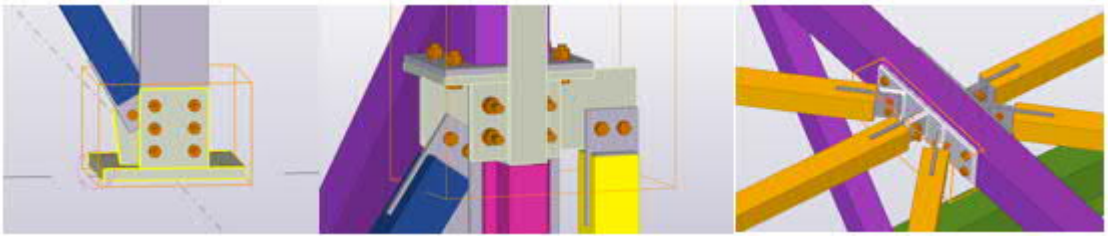

Figure 20 Example of "expendable" joint components in columns and trusses.

4.8 Component service life

Component service life calculation is important information when determining whether designing for reuse is reasonable or not. Finnish Constructional Steelwork Association has coordinated a project which targeted to develop a program to calculate service lives of different steel components. Program is called ENNUS-Teräs and was developed by VTT Technical Research Centre of Finland LTD. The program exploits factor method from ISO 15687-1. Service life can be calculated for three different façades (one of them being sandwich elements), for sheet roofing and for skeletal structure with four different reliability ratios. There are several variables in program, divided in following sections: materials, structural solutions, execution, stress from operation and maintenance level. (Vares et al 2008.)

Calculated service life for frame structures was 128 years with following conditions: Stress class C3; reliability ratio 0.95 for calculations; outdoor protective paint with epoxy resin on base and urethane in surface; component is protected from weather and does not have risks to form thermal bridges; transportation, storage and machining has been done per instructions; component is not stressed by traffic or other similar operation and component maintenance is done on regular basis. Necessary measures needed every year in regular maintenance are: checking the openness of ventilator slot, cleaning wall sides, fixing surface damages, cleaning surfaces from rust runs, dirt and trashes, checking and cleaning drain sewerage system and fixing leakages. Necessary measures needed every 5 – to 10 years are: opening building skin and checking background structures, fastener tightening and exchanging if needed, estimating condition of joints and estimating the need to maintenance painting. Maintenance painting has biggest influence to component's service life and for 128-year service life, component must be cleaned and re-painted twice. According to the program, zinc-coated components would have service-life of 100 years with same conditions, but naturally components would not need re-painting. With similar boundary conditions and good designing, calculated service life for sandwich elements was 95 years and 63 years for sheets. Example calculations for frame structure components are presented in appendix 10.

If the 37 years was used as reference service life for building and calculations made with ENNUS-Teräs as reference service life for components then number of loops would be 3.46 loops for frame, 2.57 loops for sandwich elements and 1.7 loops for sheets.

4.9 Deconstruction plan

Established practice in construction industry is to start designing demolish near the end of building's life cycle. However, one of the basic principles of DfD was including deconstruction plan in designing phase. All the current regulations, instructions and codes are focusing on current practices. Thus,

there are no established guidelines on what the deconstruction plan on designing phase could involve, so guidelines must be applied in this report.

In Finland, the traditional demolition work designing aims to meet the regulatory requirements and achieve effective demolition work. Demolition designing should concern the whole chain in demolition work – from demolition to reusing, recycling, remanufacturing or waste disposal. There are four different phases in demolition contract: project planning, structural planning, work phase planning and weekly planning. Project planning includes demolition schedule and safety document and is done by builder. Structural planning includes explanatory note for demolition and it is done by structural engineer. Work phase planning includes demolition work plan and demolition plan procedure and both are made by demolition contractor. This report concentrates on the work of structural engineer so deconstruction plan will also concentrate on structural engineer's responsibilities. In Finnish demolition work, structural engineer has following responsibilities:

- Produce demolition work explanatory note and demolition drawings.
- Inspects capacity, stability, need for support and materials for structures to be demolished.
- Inspects the accuracy of old designs and drawings.
- Recognizes risks in different work phases.
- Assists contractor with demolition work plan.
- Inspects demolition work plan. (Rakennustieto 2009.)

In New Zealand, city of Auckland and independent consulting organization BRANZ have created a program called REBRI which is short for Resource Efficiency in the Building and Related Industries. REBRI includes instructions on deconstruction planning which are made for traditional demolition or deconstruction and are suited for New Zealand, but can be applied in this report. Deconstruction planning starts with site and building assessment which helps recognizing possibilities for further reuse – if the whole building should be reused or dismantled in to pieces. After assessment, material inventory needs to be done. It studies quantities and material types in the building and aims to define the level of reuse or recycling practice to different materials. Expenses and savings from different procedures should be determined in material inventory. It is important to include all the possible costs and payments like reduced landfill costs, payment for reusable material and costs of deconstruction works. Scheduling the deconstruction is next phase in planning. Each project is unique so building's quantities, material types and conditions affect to deconstruction scheduling and methods. For undamaging deconstruction and maximal recovery ratio it is important to use previous drawings and designs to determine deconstruction methods, ensure that there is enough time for deconstruction and make sure that clients understand that deconstruction requires more time. Deconstruction plan is needed and it is targeting to maximize recovery of resources. Plan should include: Material quantities for reuse, remanufacture, recycle or waste disposal; possible end use for different products; deconstruction methods; schedule; possible storage area planning and procedures for material removing and handling. (BRANZ 2017.)

4.9.1 Deconstruction plan for case project

Deconstruction plan should be made in cooperation with design team, building contractor, demolition contractor and client. Since this report does not have design team, contractors or client, brief deconstruction plan will be made focusing on structural engineer's responsibilities. Deconstruction plan will include following:

- Reusable components.
- Possible end use for different components.
- Strategy on documentation and component traceability.
- Order of deconstruction.
- Structural observations.

4.9.2 Reusable components

For the most parts of the building, case project is designed to be reused. Primary components are designed in such way, that there are various possibilities for reuse. Only exception are intermediate level composite structure support beams and small column pieces in the end columns. Every other steel component in the building can be assumed to be reused. Case project has several plates bolted to primary components that are unique and are hard to reuse like brace gusset plate assemblies connected to top chord or column end plates and base plates that have gusset plates for braces and/or door frames. There are no insuperable obstacles for reusing them, but applications are clearly limited if remanufacturing is not made.

Building's skin consists of load-bearing sheets and sandwich elements. Solutions made in the designing phase targeted to improve reuse possibilities for these components. Assumption in deconstruction plan of this report is that nearly 100 % of sheets and elements can be reused. Purpose was to run this assumption by some demolition experts but unfortunately there were none found that were interested in cooperation at the time. Biggest risk for sandwich elements is exposure to weather conditions and wetting, so precise plan would be needed for storing the sandwich elements. Load-bearing sheets would be hard to dismantle without damaging them, so deconstruction would need lot of time. Again, more accurate evaluations and condition surveys would be needed when the life cycle of building is approaching its end.

4.9.3 Possible end use for different components

Case project has basically four different components in frame: beams, columns, trusses and braces. Other components include door frames, inside columns and inside beams, but they all are same profiles as braces. Beams and columns have only bolt holes in them so they can be reused universally. Every brace has similar connection details and most of them have same length so they can be reused as braces in building with similar distances. After slight remanufacturing braces can be reused in various applications like columns or beams. Trusses can be reused as trusses in building with similar span length. Slight remanufacturing in connection details gives the possibility to reuse half truss in smaller building as single pitch roof. It is also possible to remove diagonal bars from the truss by cutting which would give tubular slabs for further manufacturing, but it needs larger actions in workshop. Case project's separate plates can be reused in various applications depending

on demands and with some remanufacturing possibilities are basically limitless. Sandwich elements and load-bearing sheets can be reused in similar applications.

4.9.4 Documents and traceability

Accurate deconstruction planning is much easier if proper documentation is made in designing phase. Designs, plans, drawings and reports helps decision making a lot. Traditional archiving is important, but exploiting new technologies might give a lot of valuable information for future reuse. Combination of smart steel and BIM could be reasonable solution to improve documentation and traceability. Components could have identification tag (for example radio frequency identification) which would include information of the component. From structural engineer's point of view, most important information included in the tag would be: cross section, material grade, bolt holes, welds, dimensions, corrosion protection, service life, manufacturing date and previous use. Utilizing the cooperation of BIM and smart steel could be very helpful for designers if component could be imported to model and all previous information would be included in the component. Cooperation might even enable founding a component market that would link supply and demand with extremely accurate information on components. (Ness et al 2015.)

4.9.5 Order of deconstruction and structural observations

Deconstruction method in case project would be sorting demolition. In Finland, there are few recommendations on phases of demolition and order of demolition in sorting demolition. Phases are: hazardous waste inspection, hazardous waste disposal, cleaning building of other waste, removing materials and parts that are not included in building's frame and sorting demolition of the frame. Order of deconstruction is: electrical installations, HVAC installations, floor surfaces, doors and windows, timber parts, separating walls, façade materials, frame and foundations. (RIL 2013, p. 207-208.)

One of the main concerns in reuse designing of this report was to simplify sorting in deconstruction. Case project's frame is self-supporting so structural functioning is very understandable. For example, frame stability does not depend on load-bearing sheets. Thus, deconstruction order is also straightforward after installations, floor surfaces, doors and windows, separating walls and inside structures have been deconstructed. Deconstruction order is following:

- Sandwich elements. Weather guard must be considered.
- Load-bearing sheets. Special care must be taken to dismantle sheets undamaged.
- Wall braces, roof braces and door frames. Same cross section, can be sorted in same pile.
- Trusses and beams. Crane support needed in deconstruction.
- Columns. No need to dismantle base plates, end plates, splices or H-sections on deconstruction site. If needed, they can be removed later, on new construction site or workshop. Supports needed when cutting anchor bolts.

4.10 Case results

4.10.1 Quantities and comparison between projects

Decisions made in designing phase have increased number of fasteners and amount of steel kilograms quite significantly. Due to concern on quantities it was important to gather data on the amount of connection components and fasteners in different solutions. This distribution helps to estimate if solutions are reasonable also economically. Exact quantities for case project and example building are shown in appendix 11.

Main target of this report was to compare different solutions economically to understand whether reuse designing is a reasonable choice in the future. Easiest way to compare buildings is simply to compare steel kilograms between solutions. Table 5 shows comparison between different units of buildings.

Table 5 confirms that concerns about increasing costs are valid. Total steel weight is about 1.40-times higher and weight for fitting is 2.32- times higher in case project. Few decisions clearly have critical influence on steel kilograms. First noticeable thing is the weight of column fittings, which is extremely high in case project compared to example building. Column splice plates weighed 1237.9 kg and H-sections weighed 1269.4 kg which results for 2507.3 kg. Difference between buildings is 3065.3 kg so basically the amount is almost entirely dependent on column splices. Second amount that catches interest is the weight of the trusses. There are two decisions that increase the amount of steel kilograms in trusses. Load-bearing sheets are not used as buckling supports which leads to stronger profile in top chord and the other one is the decision to use same cross section in every diagonal bar. Diagonal and vertical bars in example building weigh 3984 kg and top chords weigh 6240 kg while in case project, diagonals weigh 5479 kg and top chords 10398.12 kg. Third notice is the weight of braces, door frames, inside columns, inside beams and brace fittings. There are some inaccuracies in statistics because of classification differences between models which affects mostly braces. However, case project has much more braces and much more brace fittings than example building which is due to decision to use braces for stiffening in both directions. Example building exploited rigid frames for stiffening. The amount of brace fittings increased because the gusset plates were not welded to top chords. The last observation is that total weight of load-bearing sheets is significantly bigger in case designing and has big effect to project's total amount of steel kilograms.

Number of fasteners also increases in reuse designing. Example building has 387 bolts within frame main part connections. Load-bearing sheet and sandwich element fasteners are not included in the amount. With reuse designing, number of fasteners is multiple. Total number of different bolts in the frame is 2749 bolts. Reason behind the difference is mainly due to four different details: column splices, column base plates, column end plates and roof brace gusset plates. Table 5 presented previously the number of bolts in these details and it is following: Column splices 1152 bolts (M24*90), column base plates 540 bolts (M24*100), column end plates 240 bolts (M24*85 and M24*100) and brace gusset plates 160 bolts (M24*280). Total number of bolts in these details is 2092 bolts. Connections are not analyzed properly in this report so number of bolts could be decreased with proper structural analysis. Accurate fastener lists are presented in appendix 11.

Table 5 Steel weights in example building and case designing.

Unit	Example building [kg]	Case designing [kg]
Columns	13800	14722.3
Column fittings	2869	5934.3
Trusses	14888	20490.8
Braces, door frames, inside columns and inside beams	4631.6	7931.2
Brace fittings	229	1917.2
Beams	2158.7	2182.4
WQ beams	2920	3964.2
WQ beam fittings	116	282
Load-bearing sheets	17679.5	26020.1
Total weight for fittings	4286	9954
Total weight for main parts (incl. sheets)	56705.5	75287.3
Total weight	60991.5	85241.3

4.10.2 Summary of solutions made to improve reuse

Reuse designing was targeting to maximize steel kilograms applicable for reuse. Approach to reuse designing was based on the main principles of DfD. Most important factors in reuse designing were: regularity and simplicity, mechanical connections, “expendable” parts and standardized lengths. All solutions and their effects on further reuse are listed in table 6.

Profitability of some decisions can be questioned. For example, thicker load-bearing sheets. It is not explicit that reuse possibilities will improve by using thicker sheets, but cost increases quite significantly. Buildings have quite similar dimensions and frame distances so it can be assumed that with optimization, sheet weight would be approximately equal in case building and example building. Decision to use same standard distance between inside columns was supposed to improve regularity and maybe increase reuse possibilities for support beams. The decision does not have very clear profits, but it increases steel kilograms. If the case project uses optimization with load-bearing sheets and same layout with inside columns and WQ-beams as the example building does, steel kilograms can be decreased with 9384.8 kg. This would lead to total weight of 75856.5 kg, which is 1.25-times higher than example building.

Table 6 Solutions made in desiging phase, their effects on reuse and their effects on quantities.

Solution	Target effect on reuse	Effect on quantities
Regular and standardized distances between columns	✓ Regular length in components ✓ Easier sorting demolition ✓ Better source for future projects	- No significant effects
Increasing nature loads	✓ Possibility to reuse the whole building nearly everywehere in Finland	- Has some effects on quantities, but evaluation not done in this report
Using braces as buckling support	✓ Roof is more adaptable to changes ✓ Building is easier to deconstruct	- 20 extra braces - 40 extra gusset plates and 40 extra connection plates - 160 extra bolts - Approximately 2380 kg more steel from extra parts - Approximately 4469,4 kg more steel to trusses
Using braces for stiffening	✓ More general and understandable structural system ✓ Easier deconstruction ✓ Better source for future projects	- 6 extra braces - 10 extra gusset plates - 24 extra connection plates - 24 extra bolts - 733.4 kg more steel

Regular cross sections within a component	✓ **Easier to do sorting when deconstructing** ✓ **Better source for future projects**	- **922.3 kg more steel to columns** - **No significant effects on braces**
Regular material grade	✓ Easier to do sorting when deconstructing ✓ Better source for future projects	- No significant effects
Using regular and thicker load-bearing sheets	✓ Easier to do sorting when deconstructing ✓ Better source for future projects	- *8340 kg more steel*
Using friction clamp connections in sandwich element detailing	✓ Easier to find reuse applications	- No significant effects
Assembling columns from standard pieces	✓ Universal reuse possibilities ✓ Standardized building product	- 128 extra splice plates - 24 extra H-sections - 1152 extra bolts - 2507.3 kg more steel
Base and end plates bolted to columns	✓ Universal reuse possibilities ✓ Repeatable solution	- 120 extra plates - 780 extra bolts - 575.5 kg more steel
Same cross section in every diagonal bar in trusses	✓ Possibility to reuse half of the truss in narrower building	- 1495 kg more steel

Using "expendable" parts	✓ **Universal reuse possibilities**	- **196 extra plates** - **940 extra bolts** - **Approximately 1359,5 kg more steel**
Regular distance between inside columns	✓ Better reuse possibilities for intermediate level support beams	- 1044,2 kg more steel
Screws used as fasteners in load-bearing sheet connections	✓ Easier to dismantle sheets undamaged	- No effects on quantities, but labour cost increases

4.11 Case conclusions

4.11.1 Investment profitability

Previous chapter showed that reuse designing increases investment. After adjusting load-bearing sheets and WQ-beams, steel kilogram ratio between reuse designing and traditional designing is 1,25. Reusable building has more fasteners and fittings than traditional building. Basic calculations on investment profitability are needed to evaluate whether the investment is worthwhile or not. Net present value method is convenient tool to produce simple evaluations on investment profitability.

NPV is a method where yearly net profit and residual value is changed by discounting into investment date amount of money, or in other words, net present value. NPV is calculated by subtracting investment from net profit and residual value. If NPV is negative, investment is not profitable. Formula 3 presents NPV method (Kokko 2015, p. 31-32)

$$NPV = \Sigma_{t=1}^{n} \frac{C_t}{(1+i)^t} + \frac{RV_n}{(1+i)^n} - C_0 \qquad (3)$$

Where NPV is net present value, C_t is yearly profit, i is imputed rate of interest, t is reviewable year, RV is residual value, n is the last year of service life, and C_0 is capital requirement.

In reuse designing there is no yearly profit so formula reduces to subtraction of discounted residual value and needed capital requirement. In this report, calculation model is produced by estimating constant value for capital requirement and altering imputed rate of interest and residual value. Even though buildings have different steel grades, first reference value for capital requirement is total steel

weight ratio 1.25. It can be estimated that contract price for steel kilogram is bit higher in reuse designing due the large number of fittings and fasteners and it is estimated to be 5 % higher. Thus, total capital requirement in reuse designing is 1.25*1.05=1.3125. Difference between designing methods is 1.3125-1=0.3125. Net present value is calculated with interest rates from 1 % to 6 %. Calculations are made with residual value differences from 0.1 to 0.9. Residual value difference presents the difference between reuse designing residual value and traditional designing residual value (basically scrap steel price). Accurate NPV results are shown in appendix 12. If NPV is negative, it is marked red and if it is zero or above, it is marked green in the results. Results are presenting the limit when building should be deconstructed and components sold forward with different residual values and interest rates. Maximum is 37 years which was the average service life of warehouses and industrial buildings in Huuhka's and Lahdensivu's (2016, p. 25) study. Table 7 shows calculated limits for service life.

Table 7 Building's deconstruction year limit with different residual values and interest rates if capital investment is 1.3125-times higher.

Interest rate [%]	Difference in residual value								
	0.1	0.2	0.3	0.4	0.5	0.6	0.7	0.8	0.9
1	-	-	-	24	37	37	37	37	37
2	-	-	-	12	23	37	37	37	37
3	-	-	-	8	15	22	27	31	35
4	-	-	-	6	11	16	20	23	26
5	-	-	-	5	9	13	16	19	21
6	-	-	-	4	8	11	13	16	18

As the table shows, difference in residual value must be at least 0.4 with every interest rate and for example, with 6 % interest rate, reuse designing is not very profitable. Therefore, it should be inspected what the service lives would be like, if the capital investment was a bit smaller. Calculations with 10 % increase in capital investment are shown in appendix 13. Table 8 shows the service life limit when increase in capital investment is 10 %.

Table 8 Building's deconstruction year limit with different residual values and interest rates if capital investment is 1.1-times higher.

Interest rate [%]	Difference in residual value								
	0.1	0.2	0.3	0.4	0.5	0.6	0.7	0.8	0.9
1	-	37	37	37	37	37	37	37	37
2	-	35	37	37	37	37	37	37	37
3	-	23	37	37	37	37	37	37	37
4	-	17	28	35	37	37	37	37	37
5	-	14	22	28	32	36	37	37	37
6	-	11	18	23	27	30	33	35	37

If capital investment increase is limited to 10 %, limit service lives are much more reasonable. In this project, an estimation can be made of what solutions could be included if the capital investment increase was limited to 10 %. If only steel kilograms are concerned in the limitation, it means that steel mass can be increased by 1.1*60991.5 kg = 67090.65 kg. Previously it was decided that adjustments to load-bearing sheets and WQ-beams were abandoned which led to total of 75856.5 steel kilograms. To achieve the 10 % limit, steel kilograms should be decreased with 8765.85 kilograms. There are two questionable solutions that could be dismissed from the desiginings. First one is using the column splices and second one is using same cross section within truss diagonal bars. Since there are no supply chains or markets for reclaimed components, assembling columns from standard pieces is a bit risky. Same standard bolt holes can be made to 9 m pieces and additionally some of those columns will need additional bolt holes to connect intermediate level beams to them. If the splices are dismissed, then it should also be inspected if some plates could be removed from column end plate assemblies. Those assemblies have plates in both side of beam web and in both flanges. If the plates from flanges could be removed, it would mean that H-sections would no more be necessary in columns outer flange for sandwich element connections. Since the connection is a hinge joint in structural analysis, it could be possible to remove those plates. Column end plate assembly's flange plates account for total of 121.6 kilograms. Picture 21 shows flange plates in end plate assemblies.

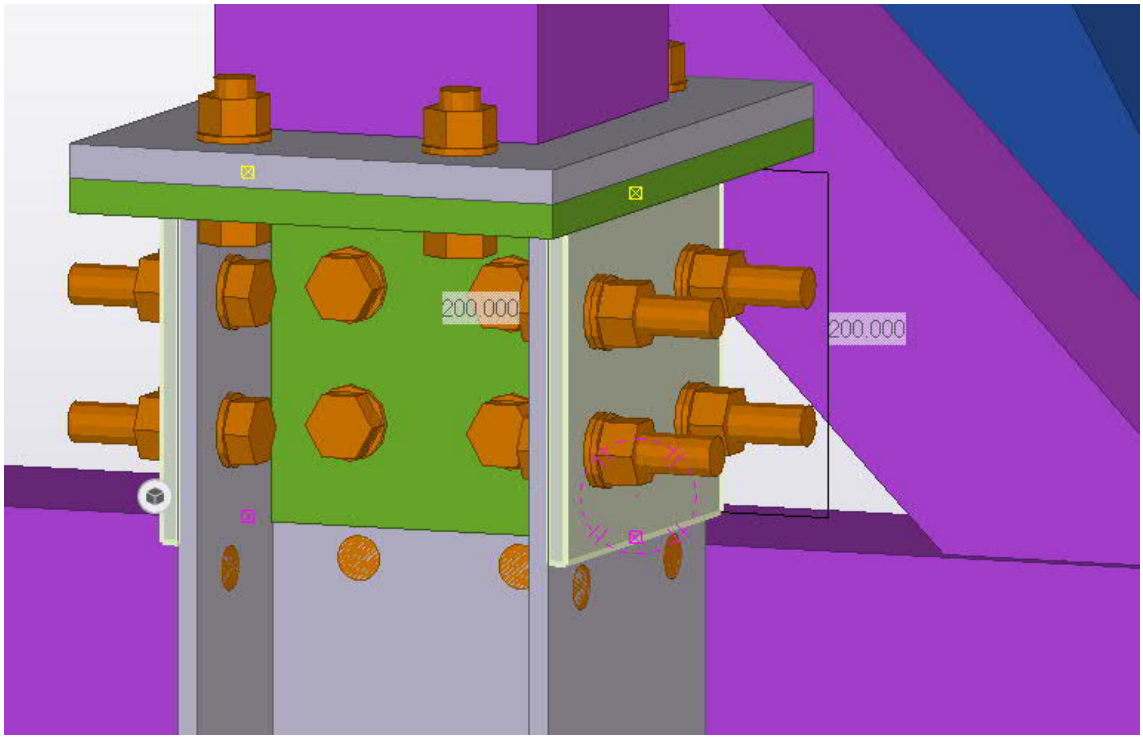

Figure 21 Flange plates in end plate assemblies.

Using same cross section in every diagonal bar does not have major affect on reuse possibilities so it can be abandoned also. Saved steel kilograms are calculated with the difference that reuse building and original building have in diagonal bar weight. It means that increase in nature loads is not concerned so evaluation is not accurate. Dismissing these two solutions and flange plates decreases steel mass with 4124 kg. All other solutions are essential in terms of reusability or building deconstruction. Using braces as buckling support instead of load bearing sheets has the largest effect on steel kilograms. DfD principles stated that it is important that building layers with different service life are easily separated from each other. When load-bearing sheets act as buckling support, trusses depend on the support that skin structure are offering them so skin structure and frame structure are not clearly separable. If this fact is compromised to achieve savings in steel kilograms, steel mass can be decreased with 4555 kg. Total savings would be 4124 kg + 4555 kg= 8679 kg and total amount of steel kilograms in the building would be 75464 kg – 8679 kg = 66785 kg. Steel mass ratio between case project and original project would be 66785 kg / 60992 kg = 1.09. These dismissals would leave some safety factor for contract price and the fact that steel kilogram differences do not concern increased loads.

To sum it up, if capital investment increase is limited to 10 %, following solutions can be included in case project:

- regular and standardized distances,
- nature load increasement (estimation),
- stiffening with braces,
- regular cross sections (except for truss diagonals) and material grades,
- friction clamp connection in sandwich element connections,

- bolted base - and end plates in columns,
- and “expendable” parts.

Following solutions must be dismissed:

- thicker load-bearing sheets,
- using braces as buckling supports,
- column splices,
- standard distances between inside columns,
- and using same cross section in every diagonal bar.

Summary of weight of the all different cases including original design, and three re-use cases are shown in Table 9.

Table 9 Steel quantities and fastener amount in different re-use options

	Original design	**Re-use design 1**	**Re-use design 2**	**Re-use design 3**
Profiles	39 026 kg	50 846 kg	49 801 kg	42 760 kg
Plates	4 286 kg	7 983 kg	7 983 kg	5 992 kg
Sheets	17 680 kg	26 015 kg	17 680 kg	18 033 kg
Total weight	**60 992 kg**	**84 844 kg**	**75 464 kg**	**66 785 kg**
Fasteners	**387**	**2749**	**2749**	**1315**

Investment profitability can be estimated from different angle of view. If interest rate and service life are constants, extra investment limit with different residual value differences can be calculated with NPV. Investment limit will be calculated with 20 years service life and 5 % interest rate. Picture 22 presents result chart from these calculations.

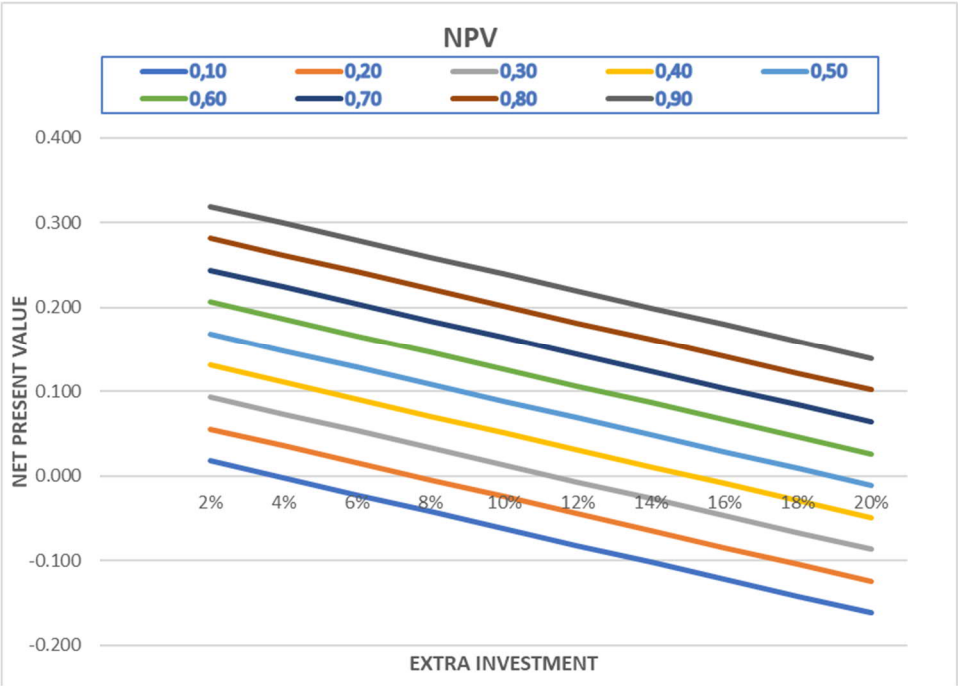

Figure 22 Extra investment limit with 20 years service life and 5 % interest rate.

Results from investment limit calculations are following:

- With 0.1 residual value difference, extra investment limit is approximately 4 %.
- With 0.2 residual value difference, extra investment limit is approximately 8 %.
- With 0.3 residual value difference, extra investment limit is approximately 11 %.
- With 0.4 residual value difference, extra investment limit is approximately 15 %.
- With 0.5 residual value difference, extra investment limit is approximately 19 %.
- With 0.6 or higher residual value, extra investment limit is higher than 20 %.

However, there are several uncertainty factors in estimating investment profitability with NPV. Residual value is not as simple as it seems in these calculations, because inflation probably would have some effects to residual value. In this report, residual value is basically constant in relation to time. If estimations go far in the future, risk of mistakes grows and these mistakes are beneficial to reuse economy. If a building that is build today is worth of 1 and the same building is build 20 years from today with 5 % interest rate, capital investment will be $1*1.05^{20} = 2.65$. Previous studies stated that in Canada, reclaimed beam price was 60 – 80 % of the price of new beam (Gorgolewski, 2008). If that price is used as reference and some margin is left for business profit, it can be estimated that purchase price would be 40 %. It means that building's residual value in 20 years would be 0.4*2.65 = 1.06. This simplified example calculation proves that NPV calculations are quite conservative. Other problem that would be extremely valid in this kind of project is that NPV does not concern investment's marketing potential. Since green values and ecology is a global megatrend, investment could have positive effect on company's image (Kokko 2015, p. 32). Therefore, it can be stated that estimations made with NPV are quite conservative. This leads to the fact that reuse designing could be competitive alternative with traditional designing even from economical point of view.

5. Results

This chapter goes through results of this report and after that aims to make conclusions of these results. Chapter will first go through the results gathered from literature review and then the results gathered from case study.

5.1 Literature review

Literature review presented the fact that climate change is a significant global crisis which already affects communities around the world. There is an agreement around the world that actions must be made to decelerate climate change. Construction industry produces lots of waste and consumes natural resources so the industry has possibility to have major effect in stopping the alarming development. Since construction industry has focused on the operational phase of buildings when decreasing energy consumption, production phase has gained less attention. It means that production phase takes larger proportion of the total emissions and consumption, and therefore has larger effect when decreasing emissions and consumption. Structural component reuse is viable, yet little used method, to decrease emissions and consumption in construction material production. (Da Graça Carvalho et al. 2010, WWF 2016, WWF2017, Densley Tingley et al. 2017.)

Steel production has quite significant carbon dioxide emissions, especially in ore-based production. Therefore, steel reuse has potential in decreasing those emissions. Steel is suitable material for reuse because of mechanical connections and long service life. Literature review pointed out that between 2000 – 2012 warehouses and industrial buildings were demolished in the average age of 37 years (Huuhka & Lahdensivu, 2016). In case designing phase, it was determined that with thorough maintenance program, frame structures could achieve 128-year service life. Frame structures could consequently have 3,46 life cycle loops before melting.

Even though reuse is viable and valid method, it has not yet gained a lot of popularity in the industry. There have been several studies made on the barriers of reuse. Most significant factors were: increasing risk, increasing cost, lack of supply chain, difficult and expensive deconstruction, inappropriate connections, structural integrity of reclaimed components, recertifying, lack of rules/regulations/standards and difficulties in designing with reclaimed components. First push to increase in popularity should become from government. For example, tax reliefs, standards to facilitate design and recertifying depend on government decisions and these actions would simplify reuse a lot. (Densley Tingley et al. 2017, Talja 2014, Gorgolewski 2008.)

Main theory behind reuse is designing for deconstruction which is based on the theory of time related building layers. Every building consists of six different layers that have different service lives: site, structure, skin, service, space plan and stuff. Those layers should be distinct structures so they can be deconstructed on their own. Independent structures are easier to maintenance, fix, repair or exchange the whole component. Eventually independency facilitates also recycling and reusing after the building is deconstructed. Main principles in DfD are: transparent and easily dismantled connections, deconstruction plan included in designing phase, building's simplicity, transparency and regularity, building's flexibility, cooperation between design team, contractor and client and assuring the traceability of components by archiving designing and drawings properly. DfD demands more effort in designing phase but there are lots of positive effects in addition to recycling and reuse. It leads to more flexible building's which is already demanded in the markets, buildings are more

durable because maintenance is easier, resale value is higher and markets wider, components are easier to maintain, fix or exchange and waste management costs, waste loads decrease in the end of building's life cycle and deconstruction is better option for the environment than demolition due to lesser noise, dust and requirement of machines. DfD is targeting to achieve economic and environmental benefits with ulterior reuse and recycling. (Webster & Costello 2005, Crowther 2001, Talja 2014, Densley Tingley 2012, Brand 1995, Guy & Ciarimboli 2008.)

In the end of literature review, four different projects that had used reclaimed steel were studied. Aim was to find consistency in successes and failures in those projects. One recurring factor in those projects were that at least one constituent group had strong ambitions to use reclaimed steel. Problems that occurred during projects were similar to those found in previous publications. Toughness in deconstruction, problems in determining structural properties of reclaimed components, limited supply chains and designing with reclaimed components. Example projects proved that publications made on reuse barriers were accurate and had valid points. (Sergio & Gorgolewski, Bioregional 2011, Edmonds et al., Straka & Edmonds.)

5.2 Case study

Case study targeted to maximize reusable steel kilograms after building is deconstructed and solutions made in the case study were based on observations made in literature review. There were 14 different solutions made to improve reuse possibilities and they were:

- regular distance between columns,
- increasing natural loads,
- braces as buckling support,
- braces for stiffening,
- regular cross sections,
- regular material grade,
- regular load-bearing sheets,
- friction clamp connection for sandwich element detailing,
- assembling columns from standard pieces,
- base – and end plate connected with bolts to columns,
- same cross section for diagonal bars,
- "expendable" parts,
- regular distance between inside columns,
- and using screws as fasteners for load-bearing sheets.

If all these solutions were included in the project, total steel mass would be 85.24 tonnes while example building had 60.99 tonnes. Straight after solutions' effect on quantities were determined a decision was made that two of them should be dismissed immediately: regular load-bearing sheets and regular distance between inside columns. After dismissing these solutions, project's steel mass decreased to 75.86 tonnes which is about 1.25 times higher than the building with traditional designing.

Higher steel mass means higher capital investment. Therefore it was essential to estimate profitability of higher investment and the evaluation was made with NPV. When contract price was included in the evaluations the estimation was that capital investment would be 0.3125 higher in reuse designing compared to example building. NPV method was used to estimate a service life limit for buildings with estimated extra investment and variable residual value differences and interest rates. Accurate results are found from appendix 12 and results are also gathered in table 7. Short summary from the calculations is that with 5 % interest rate, service life is following with different residual values:

- Residual value difference 0.4, service life limit 5 years.
- Residual value difference 0.5, service life limit 9 years.
- Residual value difference 0.6, service life limit 13 years.
- Residual value difference 0.7, service life limit 16 years.
- Residual value difference 0.8 service life limit 19 years.
- Residual value difference 0.9, service life limit 21 years.

Conclusion is that with such big difference in capital investment, reuse designing is not economically viable. Thus, NPV calculations were also made with 10 % difference in capital investment. Appendix 13 presents accurate results and also table 8 gathered some results from calculations. Again shortly, with 5 % interest rate, limit service life is following:

- Residual value difference 0.2, service life limit 14 years.
- Residual value difference 0.3, service life limit 22 years.
- Residual value difference 0.4, service life limit 28 years.
- Residual value difference 0.5, service life limit 32 years.
- Residual value difference 0.6, service life limit 36 years.
- Residual value difference 0.7 or higher, service life limit at least 37 years.

Results are far more encouraging with smaller increase in capital investment so next step in the study was to estimate what solutions could be included in the project if the capital investment limit is 10 %.

Solutions that could be **included** in the project (when investment limit is 10 %) are: *regular distances between frame columns, nature load increase (estimation), stiffening with braces, regular cross sections (except diagonal bars) and material grades, friction clamp connection in sandwich element detailing, bolt connection with columns' end – and base plates and "expendable" parts.*

Solutions that must be **excluded** (when investment limit is 10 %) are: *thicker and regular load-bearing sheets, column splices, regular distance between inside columns, using same cross section in diagonal bars and using braces as bucling support.*

NPV calculations were made once more to evaluate limit for extra investment. Those calculations were made with 20 years service life and 5 % interest rate. Previously presented picture 21 shows a diagram of the results, but the results are also gathered in table 10.

Table 10 Investment limit calculations with NPV, when service life is 20 years and interest rate 5 %.

Residual value difference	Extra investment limit
0.1	4 %
0.2	8 %
0.3	11 %
0.4	15 %
0.5	19 %
0.6 or higher	20 % or higher

Results from NPV calculations are great help in estimating investment profitability, but there are few problems in the estimations. Residual value is constant in relation to time and it does not reflect very well to reality. Residual value of components in reuse designing is always dependent on the price of new component and these calculations do not concern that fact at all. It leads to some inaccuracies in the estimations and they are in favour of reuse economics. Reuse project would also be a good marketing asset to companies involved in the project. NPV calculations give conservative estimations of investment profitability in the case of reuse designing.

5.3 Conclusions and recommendations

Main conclusion of this report was that reuse designing is surprisingly expensive compared to traditional designing. In present markets, solutions that improve reuse universally are maybe a bit too expensive to be profitable. If there were governmental decisions made to improve reuse (tax reliefs, standards or recertification systems), universal reuse solutions would become more reasonable. Until then, it might be better to stay in simpler solutions. Based on the study, recommended solutions are:

- regularity in distances,
- load increasing so the building can be removed to more demanding location,
- regularity in cross sections, material grades and connections,
- end- and base plates bolted to columns,
- and difficult connection details bolted to main components or welded to existing plates (“expendable” parts in this report).

All of these could be included in project even when extra investment limit was 10 %. Thus, the conclusion is that even with smaller extra investment, reuse possibilities can be improved quite well.

5.4 Discussion of reuse designing

Reuse is not new invention, but designing structural components for further reuse is and one problem in this report was the lack of previous experiences in reuse designing. Steel has already very high recycling ratio, so that might be the reason behind minor experiences in reuse designing. There are already things done that are beneficial to nature and environment so there might not be enough motivation to do things even better. Although recycling is creditable choice, reuse is even better and steel has great potential in the reuse field.

Due to mechanical connections, steel structures are quite well reusable or at least dismantlable even without remarkable effort in designing phase. Thus, inventing new details that would improve reuse possibilities or improve deconstruction was relatively difficult. There were only few “new” inventions in this report: standard length column pieces with systematic bolt holes in both ends; bolted end – and base plates with connection plates for braces and door frames and gusset plate assemblies bolted to top chords. These details demand lots of fittings and lots of fasteners which leads to increasing cost. Target of these solutions was to improve reuse possibilities universally. Otherwise, report relied on simple and basic principles established by DfD-experts.

Hardest part of reuse designing was designing skin structures because there are so few things that can be alternated. Variable things with sandwich elements are basically length and connection details. Length is general and regular due to changes in layout so connection detail is the only thing that can be alternated to improve reuse possibilities. With load-bearing sheets, idea was to use thicker sheets so they could be dismantled safely. After the quantity calculation were made, decision was to give up that idea, because it was clearly unprofitable economically. Thus, the only solution to improve sheet reuse was to use screws as sheet fasteners.

5.5 Suggestions for further research

Designing methods and solutions produced in this report can and should be developed further. Due to the large scale of this report, most parts of the study only scratched the surface of topic in question. If components were developed and optimized further and proper structural analysis made, comparison would be more accurate. Investment profitability analysis is interesting topic that should also be researched properly. NPV method does not consider possible loops for structural component which is important issue in reuse. Economic models like leasing and renting structural components could be profitable business models for both service provider and for client, if building service life is short. Companies that offer simple hall buildings for rent are already existing around the world, so the idea could be extended to renting structural components, which might allow more adaptability in services. This report included only structural designing, so further research is needed in other designing fields like architecture and building services engineering. Reuse designing for concrete structures could be researched. If solutions for reusable floor structures and socle panels would be invented, residual value of building would increase further. With bigger residual value, reuse designing would be more profitable.

PART B: Reuse of buildings and their parts in single-storey buildings – Economic view

Construction industry consumes lot of raw materials and produces great amount of waste. To reduce its impact on the environment, reuse of building parts can be seen as a one potential solution. At the moment, reuse of building parts is not a widespread practice in the construction industry. This study investigates the economic feasibility of design for deconstruction (DfD) and reuse of building parts compared to the current practice of not DfD and recycling/landfilling in case of commercial single-storey steel structure building. Feasibility is viewed from the investor's point of view. Design for deconstruction, means designing buildings so, that their disassembly is convenient and can be done without damage. Deconstruction instead of demolition gives an opportunity for reuse of building parts.

Theoretical part of the thesis is about the DfD, reuse and valuation in the real estate industry. Scientific articles, publications and real-life examples about DfD and reuse are put together to form a general understanding about the topic. In the empiric part, discounted cash flow (DCF) method was utilised to evaluate the economic feasibility of DfD in case of commercial steel structure building. Evaluation was done by comparing traditional and DfD building in two calculations. In the first calculation it was assumed that the building stays in its current use and in the second calculation the building will be either demolished in case of traditional building or deconstructed in case of DfD building.

The net present values in the first calculation were positive, ca. €148K for the traditional building and €88K for the DfD building i.e. the traditional building performed better. The DfD building should have ca. 4% higher average rent or 0,35 percentage unit lower yield to provide similar value as the traditional building. In the second calculation the discounted residual values were negative, ca. -€98K for the traditional building and ca. -€47K for DfD building. With the base parameters the current practice of not DfD was found to be better option from the economic point of view.

Even though the results with base parameters favoured the current practice of non-DfD and recycling, there is potential for DfD and reuse with some changes in the most important parameters at least when the building is thought to be in its place for a short-term. In longer-term the economic feasibility of DfD becomes more challenging. However, there is lot of uncertainty related to the most important parameters so the results should be viewed carefully.

1. Introduction

1.1 Background

In Finland the construction sector generates a major part of the total waste volume. Most of this waste is categorised as a waste from soil construction but there is still a great amount of useful waste ending up in landfills (Sitra, 2014, p. 10, 57-59). When excluding soil waste, the amount of construction waste in year 2016 was about 1,8 million tonnes in Finland (Statistics of Finland, 2018). Recycling and especially reusing this waste effectively is a great way to decrease the environmental load of the construction sector (CircHubs). For example, reusing building components will decrease the carbon footprint of the buildings in the future (BioRegional, 2011). In Finland Rakennusinsinöörien liitto (RIL, 2013, p. 85) divides reuse and recycle practices as follows:

- Reusing whole building in existing location
- Deconstructing building and reusing it in new location
- Reusing structural element
- Reusing structural element after itemising partly
- Using structural element or material as a resource
- Using structural element or material as artificial fill
- Using structural element or material as a fuel for producing energy
- Safe disposal of waste

Currently, construction and demolition waste (CDW) is utilised way too inefficiently if Finland wants to obey the EU's Directive on waste (2008), which states that 70 % of the CDW should be recycled by the year 2020. Ministry of the Environment (2014) estimated that around 26% of the CDW is recycled in Finland as the EU's average is 47%. Finland's low figure is explained by the large amount of wood waste. Top countries like Netherlands recycle or reuse 95% of the CDW, which is desirable but unfortunately most of this material is downcycled (Coelho and de Brito, 2010). Reuse instead of just recycling should be encouraged more.

Utilising CDW at the end of buildings' life cycle should be facilitated, as most of the CDW in Finland is generated at the repair and demolition phase of the building (Sitra, 2014, p. 57, Ministry of the Environment, 2014). Treatment of the CDW must change from energy and fuel utilisation to material utilisation (Meinander et al. 2012, p. 26).

One efficient way on achieving EU's goal is to increase the reuse of the building components (Hradil et al., 2014, p. 22) rather than using them as a raw material or energy while the worst being disposal to the landfill. By reusing the building components, the landfill waste generation can be avoided. Additionally, the negative environmental impact caused by the manufacturing of new building components can be bypassed (Hradil et al., 2014, p. 39). Manufacture of new building components causes the biggest environmental load in the construction phase (Ministry of the Environment, 2013). Reuse instead of landfilling would enable the transition of the construction industry from the current take-make-dispose model to more circular economy model.

Reusing is also more environmentally-friendly end-of-life scenario for building parts than just recycling them (Kuhnhenne et al., 2018, p. 17). Materials, energy and work related to manufacturing of the building components can be saved by reusing building components with just minor modifications (e. g. cleaning, painting) (CircHubs). Recycling usually means downcycling (Adams et al., 2017), which in turn means that energy is used to make low value products / materials when compared to the original product.

Reusing building parts can alleviate the problems caused by the ever-increasing demand for the raw materials. The increased demand for raw materials causes damages to the environment as the sources of raw materials are getting scarcer and more difficult to exploit (VTT, 2013). However, the low cost and high availability of raw materials were seen as the major barriers for reuse (Deloitte, 2017, p. 58, European Commission, 2011, p. 30). To make reuse a more lucrative option, increasing taxes on the raw materials and making landfilling of the CDW an unattractive option are possible alternatives (Meinander et al., 2012, p. 68).

One factor that is prompting reuse is the fact that some building parts have a much longer expected service life than the building itself (Hradil, 2014, p. 4) and thus, creating a viable possibility for reuse. For example, for a steel frame structure was calculated a service life of 128 years (Seppälä, 2018, p. 65). In a study done by VTT (Hradil et al., 2014, p. 17) the average age for demolished industrial and warehouse buildings in Finland were 37 years, so when roughly simplified, a steel frame structure could be used c. 3,5 times in its lifetime. However, it must verified that the reusable building parts are suitable for their reuse, for example they do not cause adverse environmental or human health impacts (Hradil et al., 2014, p. 6).

Typically, when designing buildings, life cycle analysis and objectives are missing, which may lead to design solutions that will hamper possible future reuse. To increase the reuse of building components, life cycle aspects should be taken into account already in the design phase. Building parts should be designed so that they are easy to deconstruct and re-assembly, and that they retain the needed technical attributes (Kuhnhenne et al., 2018, p. 36). The building components are more reusable if they have been originally designed for deconstruction (DfD) and thus for reuse (Tingley and Allwood, 2014). At the moment a wide adoption of DfD is not a common practice in the construction industry, and the literature identifies many reasons for that, even though the benefits of DfD are also recognised (Jaillon and Poon, 2013). For example, the economic benefits are not well established, and this hinders the adoption of the DfD (Jaillon and Poon, 2013).

Reuse of building components has clear environmental benefits when compared constructing from virgin raw materials: lower use of energy and materials as well as less harmful emissions created. However, reuse is not yet seen as a widespread option for the buildings in the end of their initial life cycle: destructive demolition is usually preferred. The literature recognises many barriers and obstacles for reuse. This thesis takes a deeper look at the economic aspects towards DfD and reuse in case of commercial single-storey steel hall building located in Finland.

1.2 Research questions and limitations

This study explores the areas of design for deconstruction, reuse and real estate valuation. The aim of the study is to discover and recognise the most important economic factors affecting the feasibility of DfD and reuse. Then the study tries to find the economic positions which would support the DfD

and reuse of the building parts instead of current practice of not DfD and recycling and/or landfilling. The study also evaluates the possibilities to achieve these positions.

The case-calculations are done by utilising the discounted cash flow (DCF) method. The geographical scope of the calculations is limited to Tampere, Finland. Land acquisition and taxation costs are eliminated from the calculations, and the building type is delimited for a commercial simple single-storey steel structure building, which can used for storage or industrial use.

Relevant information for the calculations is gathered for example, from the recent market reviews done by the major Finnish real estate companies. Also, other types of sources like scientific articles and companies' web sites are utilised. Economic feasibility is viewed from the investor's point of view, as the owner of the building they have the power to decide what kind of building is desired.

The research aims to answer to the following questions:

- What is the economic value of reusable building structures?
- Is it economically feasible to design the building to be easily deconstructed from the investor's perspective? Which parameters affect the most to the feasibility?

1.3 Structure of the research and used methods

The research begins with a literature review on the reuse of buildings and their parts and investment / valuation calculations in the real estate industry. In addition, real-life examples of DfD and reuse are explored and analysed. This gives a backbone for the empiric part of the research. The empiric part consists of a case-calculus which exploits the information collected from different sources. Relevant information was gathered, for example from the recent market reviews published by the major real estate companies in Finland, scientific articles and Ruukki Construction Oy. In addition to the basic calculus, a sensitivity analysis with different variables was utilised in order to solve the feasibility of DfD and reuse of building parts. After the empiric part, the results are evaluated, and conclusions are made about the economic feasibility of DfD and reuse of building parts. Lastly, recommendations and final thoughts about the subject are given.

The constructive research method is used to solve problems from the real world by creating innovative constructions (Lukka, 2001). The method has been developed specifically in the area of business science (Lukka, 2001). In this study the constructive research method is utilised in order to solve DfD and reuse's economic feasibility via case calculus. This can be thought as a relevant problem in the process of constructive research method, which is presented in the figure 1 below. Cooperation (phase 2 in the below figure) in this study was done between Ruukki Construction Oy, Aalto University and Boost Brothers Oy by monthly meetings where ideas and progress of the work were discussed. Knowledge on the subject was acquired by analysing scientific articles, publications and other documents related to the subject of this thesis. In addition, two interviews were conducted about the real-life examples of using the DfD principles to acquire practical relevance about the subject.

Find relevant problem Resolve possible research cooperation possibilities Acquire deep knowledge on the subject Innovate solution model and develop construction Implement and test the solution Ponder solution's scope of applications Recognise and analyse theoretical contribution

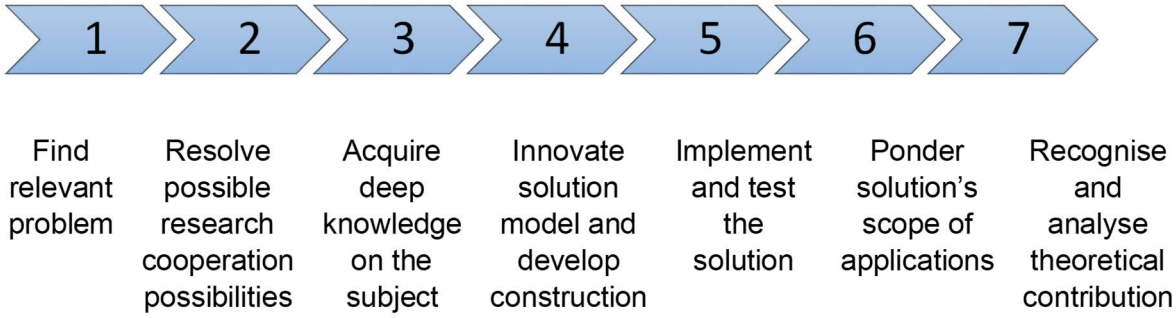

Figure 1 Process of constructive research method. Adapted from Lukka's Konstruktiivinen tutkimusote.

The economic feasibility of DfD and reuse was examined by utilising the discounted cash flow (DCF) method in case of commercial single-storey steel structure building. This was done by creating two calculations in which the traditional building and DfD building were compared. In addition, the meaningfulness of leasing the building parts was briefly explored. The feasibility was explored from the investor's point of view.

In the DCF method the market value of the property (which can be thought as the most probable selling price of the property) is estimated by forecasting the future rental cash flows of the property and exit value of the property and then discounting these values to the present (Fisher and Louziotis Jr, 2013). This method is described in more detail in chapter 5. In this study this market value is thought as the cash flow for the investor. The initial investment cost for the investor is the construction costs of the building. The net present value (NPV) or in other words profit for the investor is calculated by deducting the construction costs from the market value of the property. These figures are used in the first calculation.

In the first calculation the economic feasibility of DfD was explored by comparing the net present values (NPV) in 10-year discounted cash flow between two buildings: building not designed for deconstruction (Scenario 1) and building designed for deconstruction (Scenario 2). The only difference between buildings was that the DfD building was assumed to be constructed by applying the DfD principles which was reflected in slightly higher construction costs (initial investment). Then by changing values in some parameters where the DfD was thought to have an impact, aim was to find favourable positions for the DfD building when comparing the NPVs.

In the second calculation the comparison between the traditional and DfD building was mainly focused on the present values of the residual values. In this calculation it was assumed that the building will be either demolished (in case of traditional building, Scenario A) or deconstructed (in case of DfD building, Scenario B) after certain time period. When demolishing the building most of

the steel was thought to be recycled and when deconstructing most of the steel was thought to be reused. Aim of the calculation was to figure out whether the initial construction cost premium for the DfD building could be justified by having more economic benefits in the demolition/deconstruction phase.

The residual values were calculated by estimating the possible profits and costs relating to the demolition or deconstruction, then prolonging these estimates into the future where the demolition/deconstruction were assumed to take place and finally discounting these figures to the present. The cost items for both scenarios were based on the cost division received confidentially from VTT.

2. Reuse of buildings and its parts

In this chapter the literature related to circular economy, design for deconstruction and reuse is explored. This will give an understanding of the potential, benefits and obstacles related to reuse of the building parts.

2.1 Circular economy

The principles of circular economy are supporting the reuse of building components. Ellen Macarthur Foundation (2015) describes the circular economy as follows: “A circular economy is one that is restorative and regenerative by design and aims to keep products, components, and materials at their highest utility and value at all times…”. Reusing building components will guarantee that the components will remain at their highest utility use (Huuhka, 2008, p. 1). Ellen Macarthur Foundation (2017) divides the principles of the circular economy as follows:”

- Preserve and enhance natural capital by controlling finite stocks and balancing renewable resource flows
- Optimise resource yields by circulating products, components and materials in use at the highest utility at all times in both technical and biological cycles
- Foster system effectiveness by revealing and designing out negative externalities”

Even though Ellen Macarthur Foundation’s definition for circular economy is probably the best-known, definition of circular economy cannot be traced to a single date or writer but rather to different schools of thought (Wautelet, 2018). As a result, there are several different definitions to circular economy and, it has been even argued that the lack of common definition for circular economy has been seen as a challenge to its propagation (Preston, 2012).

In spite of various definitions, the principles of circular economy are likely to spread wider across the globe due to the increasing awareness of the state of the environment and more stringent regulation for the waste management. For example, the Finnish government aims to raise Finland as a forerunner of the circular economy by year 2025 (Ministry of the Environment, 2018). Adopting the principles of circular economy is likely to save finite resources which cannot keep up with the current traditional linear model of take-make-dispose. When applying the principles of circular economy, it

is also easier to prepare for rising prices and weaker availability of raw materials which caused be the global population growth (Sitra, 2014, p. 3).

The construction industry is globally the largest consumer of resources and raw materials (Schofield, 2017) and 25-40% of the carbon dioxide emissions is generated by it (World Economic Forum, 2016). In Europe, construction industry consumes approximately half of the all extracted natural resources in the continent (Hradil, 2014, p. 4). Thus, adopting the principles of circular economy more widely will have a massive potential to reduce the environmental load of the whole construction industry. Construction sector is resource and waste-intensive industry (Kuhnhenne et al., 2018). By applying the principles of circular economy, it is possible to prepare for the rising prices of raw materials, which is fuelled by the increasing demand of the global population growth (Sitra, 2014, p. 4).

Accenture (2014), found in their study that adopting circular economy principles enables companies to gain competitive advantage. But despite the vast potential of the circular economy principles, the adoption of these principles has been very small-scale in the construction industry (Adams et al., 2017). The focus has been on minimising the waste at the construction phase and recycling the waste. For example, in Finland demolition company Delete has based its business around effective waste management process and reclamation of the valuable building materials like metals (Sitra, 2014, p. 57).

The Consumer Products Association (2016) argued that low commercial value of materials at demolition, lack of widespread secondary market mechanisms and deficiency of quality assurance for secondary and recycled materials were seen as the barriers for more wider adoption of the circular economy principles. Arup (2016, p. 58) stated in their report that more incentive and regulatory mechanisms are needed to support the circular economy in the built environment.

2.2 Design for deconstruction

In order to promote the reuse of buildings and their parts, designing buildings to be easily dismantled without damage and so that the parts can be reused are the key factors (Talja, 2013). Building components should retain their integrity and technical properties after deconstruction and re-assembly (Kuhnhenne et al., 2018). Dismantling phase should be taken into account already in the design phase of the building project (Sitra, 2014, p. 59).

Design for deconstruction (DfD) aims to utilise the building materials, parts and systems as effectively as possible after their initial life cycle (Seppälä, 2018, p. 26). At the moment it can be said that designing buildings for deconstruction is not a wide-spread option in the construction industry (Jaillon and Poon, 2013), even though deconstruction is gaining more awareness in the industry (Akinade et al., 2016). If the DfD principles would spread wider in the construction industry, this would increase the potential of steel reuse in two ways: cost of deconstruction would decrease as the methods of deconstruction would develop and costs of recondition would decrease because of the standardisation (Kuhnhenne et al., 2018, p. 78). For example, in Germany the costs of deconstruction were first 10 times more expensive than traditional demolition but as the methods developed it was only double in 2008 (Huuhka, 2008, p. 73).

DfD principles are likely to increase the initial construction costs, so there should be clear economic benefits visible to the investor, if the investor would want to have and additional investment in the beginning. Currently the drivers behind the designing of building products are usually cost and performance, which will likely lead to their disposal after their initial use (Kuhnhenne et al., 2018).

DfD benefits include for example, building components which are easier to maintain, repair or exchange (Webster and Costello, 2005). If the buildings were built by deploying DfD principles, significant waste reduction, preserved embodied energy and diverting waste away from landfills could be achieved (Jaillon and Poon, 2013, Akinade et al., 2016). However, this requires that the deconstructed building components have value and they can used after the deconstruction relatively easily (Akinade et al., 2016).

Talja (2013) proposes following ten key principles for DfD:"

- Document materials and methods for deconstruction
- Select materials using the precautionary principle
- Design connections that are accessible
- Minimise or eliminate chemical connections
- Use bolted, screwed and nailed connections
- Separate mechanical, electrical and plumbing (MEP) systems
- Design to the worker and labour of separation
- Simplicity of structure and form
- Interchangeability
- Safe deconstruction"

Obviously following all the principles in the building project is challenging but for example, documenting the materials and methods for deconstruction should be nowadays quite easy to conduct. Also, Edmonds et al. stressed the importance of organising and storing of the original drawings of the building as it facilitates notably the deconstruction and eventually reuse. Building materials as well can be chosen so they are durable and harmless to the environment (Talja, 2013).

When designing buildings to be easily deconstructed, this may likely add to the cost of the initial construction project (Akinade et al., 2016, Talja, 2013). And as the possible benefits of the easy deconstruction at the moment are not certain, occur far in the future (Talja, 2013) and may be received by other stakeholders than the original ones, these hinder wider adoption the DfD principles. That is why the deconstruction may not be the most economical choice even though it may be the most beneficial to the building components at the end of building's life cycle (Akinade et al., 2016). However, as the regulation towards waste creation is likely to tighten, for example by expanding manufacturer's responsibility on CDW, this will likely encourage wider adoption of DfD (Guy et al., 2006). Currently producers in the building industry do not have responsibility of their products throughout the whole lifecycle via legislation (Jaillon and Poon, 2013).

Research about design for deconstruction and reuse has been limited. According to Adams et al. (2017), there are lack of incentives for design for deconstruction and thus reuse of the building parts. Also, Talja (2013) states in his report that more incentives are needed for a wider adoption of DfD. These incentives could be provided through regulation (Kuhnhenne et al., 2018). Akinade et al.

(2016) emphasise the role of the government for setting the targets and providing the supportive legislation towards wider adoption of the DfD principles.

2.3 Definition of reuse

According to the EU's Directive on waste (2008), "reuse means any operation by which products or components that are not waste are used again for the same purpose for which they were conceived". This definition is rather narrow as it excludes components which are not becoming waste but used for different purpose than its original one (Hradil et al., 2014, p. 6). However, if the building component becomes waste, then it must obtain the end-of-waste status to have a possibility to be reused (EU's Directive on waste, 2008). To receive the end-of-waste status the following conditions must be met:

- the substance or object is commonly used for specific purposes;
- a market or demand exists for such a substance or object;
- the substance or object fulfils the technical requirements for the specific purposes and meets the existing legislation and standards applicable to products; and
- the use of the substance or object will not lead to overall adverse environmental or human health impacts.

(EU's Directive on waste, 2008)

Hradil et al., (2014, p. 7) define reuse as "the process when structural element is used for the same structural purpose on another purpose in the built environment". This definition takes into account the possibility to use the component in alternative use. In the BlueScope's (2012) definition "reuse is the ultimate in recycling, no reprocessing energy is required: the components is simply moved from one location to another" is emphasised the no need for reprocessing.

In this thesis the reuse is defined by using the building components in some form in the construction industry with just minor modifications carried out (e.g. cleaning, painting). For example, using the steel pillars as a steel beams is conceived as a reuse.

2.4 Legislative aspects towards reusing building parts

In Finland there are three different levels of legislation that are applied for reusing building parts. From the EU-level there is EU's Directive on waste (2008). Then there is European Parliament's and Council's regulation for construction products (2011). On the national level, the Land Use and Building Act (1999) is applied.

From the legal perspective the easiest and the most cost-effective way to reuse building parts would require that the building parts would not been in the first place classified as a waste. Then they would avoid onerous end-of-waste process. The building parts could be (if their essential characteristics would also remain the same) sold professionally with the old CE-marking and Declaration of Performance (DoP) without need for acquire new certificates or intervention from the authorities. Though this kind of case is quite questionable as the lifetime for building products are usually decades which means that it is difficult for the building products to fulfil the upcoming requirements. In cases of private, small-scale use without commercial transaction CE-marking is not needed

enabling relatively easy reusability for building products. (Ojanen, 2016, p. 52, 56-59, Huuhka, 2008, p. 15).

If the building product is classified as a waste, then it must pass the end-of-waste criteria in order to enable its reuse (EU's Directive on waste, 2008). And if the building product is desired to be reused professionally in the construction use, then it must obtain valid CE-marking with valid DoP (European Parliament's and Council's regulation for construction products 2011). If the building products are used outside of the construction industry, then they must fulfil the requirements set by its new intended use.

In case when the essential characteristics of the building products have changed, which is likely for products with long life cycles, they must go through the procedure to acquire new DoP and CE-marking. This means testing each building product separately which is costly. (Ojanen, 2016, p. 51, 57).

2.5 General information about reuse of buildings and their parts

Reuse will preserve and enhance natural capital as it replaces the use of the virgin raw materials and reduces the energy needed to manufacture building components. Also, the work that has been done to manufacture the components does not go to waste (Huuhka, 2008, p. 1). As a prerequisite, the reusable building components must be environmentally friendly e.g. safe for health and environment and technically suitable for reuse (Hradil et al., 2014, p. 43, Ellen MacArthur Foundation, 2017). To ensure that the reusable material does not damage, selective deconstruction methods must be utilised in the demolition phase instead of destructive methods (Hradil et al., 2014, p. 43).

In the study done by Huuhka and Hakanen (2015) steel or concrete beams and columns were seen to have best reuse potential in the near future when it comes to the load-bearing building components in Finland. In the more distant future also steel trusses and timber beams and columns were seen to have potential for reuse. What comes to the material, the concrete was estimated to have the lowest reuse potential in the more distant future. The estimated percentages for reuse can be seen from the table 1 below.

Table 1. Estimated percentages for reuse. Adapted from Huuhka and Hakanen's Potential and barriers for reusing load-bearing building components in Finland

Material component	Likely in 2020	Preferred in 2020	Likely in 2050	Preferred in 2050
Concrete				
beams	7	15	15	25
columns	7	12,5	12,5	20
slabs	5	12,5	12,5	25
sandwich panels	5	10	10	20
Steel				
beams	7	22,5	20	55
columns	7	20	20	50
trusses	5	15	20	35
sandwich panels	5	17,5	15	35
Timber				
beams	5	20	20	55
columns	5	20	20	55
trusses	5	10	10	40
CLT slabs and panels	5	12,5	20	55

As reuse of building components is in its infancy in Finland - it has been estimated that under 1% of the material from the dismantled buildings is reused (Saarinen, 2015,), it can be deduced, that there has not been done any actions to facilitate the reuse. With that in mind the percentages presented above may seem to be too optimistic to reach. For a comparison in the United Kingdom on average 5% of the steel building parts were reused in 2012 (SteelConstruction.info).

Already in 2006 in study done by Gorgolewski et al. was presented that there is big potential to increase the reuse of the steel components in the construction industry. This would however require market forces to improve the profitability of the reuse. Meinander et al. (2012, p. 77) repeated the requirement that economically viable solutions are needed to promote reuse. Kuhnhenne et al. (2018, p. 46) stated that high market demand and components designed for easy disassembly and reassembly are needed for reuse to occur.

From the environmental perspective reuse has lot of benefits when compared to building from the raw materials. Producing the building materials from the virgin raw materials causes the biggest

environmental load in the construction phase of the building (Ministry of the Environment, 2013). These industrial process can be mostly bypassed, when reusing the building components (Hradil et al., 2014, p. 39) and thus reduce the pollution related to manufacture of the building components (Akinade et al., 2016). Reuse of building parts will also reduce the need for energy and raw materials for producing new building components (Sassi, 2008, Huuhka, 2008, p. 6). For example, BioRegional (2011) states that: "…reused steel sections typically have 25 times lower environmental impact than new…". Reuse will decrease the waste created in the demolition phase of the building and thus reduce the need for landfills (Pun et al., 2006).

2.6 Obstacles for reuse of buildings and their parts

European commission (2011, p. 30) stated in their report that one of the main economic barrier for the reuse and recycle of CDW was the low cost and high availability of virgin raw materials. For example, in a study done by Dunant et al. (2018) was found that using new steel elements would be cheaper than reusing old steel elements.

On the EU-level costs related to reuse is often mentioned as the major obstacle (Hradil et al., 2014, p. 19). The increased costs come from many possible sources. In order to reuse building parts in a desired manner, they have to be disassembled in way that components do not break down or otherwise damage during the process. Applying DfD principles would alleviate this. However, as disassembling is usually more labour-intensive when compared to demolition (Akinade et al., 2016), this adds up to the costs especially in countries with high wages. In a study done by Dantata et al. (2005) the overall costs of deconstruction were estimated to be possibly 17-25% higher than demolition costs, when deconstructing residential buildings. Most of this increased costs came from the markedly higher labour costs when compared to demolition (Dantata et al., 2005). Akbarnezhad et al., (2014) also found that increased cost typically prevents deconstruction over the demolition.

Nonetheless, if building components can be retained after their initial life cycle and they have functioning markets, it is economically beneficial to deconstruct the building rather than purely demolishing it (Akinade et. al, 2016). Tatiya et al. (2017) challenged the increased cost related to deconstruction in their study, and their findings indicated that deconstruction would generate less costs than demolition. This inevitably requires that there is demand and functioning markets for the salvaged materials, which is not at the moment true for many building components (Meinander et al., 2012, p. 72).

Deconstruction rather than demolishing is usually more time consuming and as the schedules are tight demolishing is preferred (thus preventing the reuse possibility) (da Rocha and Sattler, 2009, Jaillon and Poon, 2013). However, the study done by da Rocha and Sattler (2009) found that when deciding deadlines for demolition operations, these timetables would enable deconstruction of most of the building parts. Then the demolition might be justified by the financial factors: demolition is cheaper (Sassi a, Seppälä, 2018, p. 10, Kuhnhenne et al., 2018, p. 11).

The current legislation and the lack of standards for reusable components are as well recognised as major obstacles for reuse also in Finland. For example, if the building material has a waste status after the preparation for reuse, environmental permit is needed, which increases the costs. If load-bearing building components are desired to be reused for load-bearing purposes, thorough testing is required, which is costly. CE-marking, which is mandatory for construction products, do not cover

reusable construction products at the moment. If the building components from the deconstructed building are desired to be reused, they have to meet the requirements and properties stated in their Declaration of Performance (DoP). If characteristics of the building components have changed, then they must acquire new DoP and CE-marking in order to be reused and this again adds to the costs. Without CE-marking building materials cannot be used or sold professionally as a construction products. (Hradil et al., 2014, p. 9, 44, 64, Ojanen, 2016, p. 57, 64).

As the characteristics of the deconstructed building components may be hard to clarify, the clients may be reluctant to use uncertified salvaged materials in their building projects (Bougrain and Laurenceau, 2017). For example, the uncertainty related to the history and properties of the components is recognised as a significant barrier for reusing existing steel buildings (PROGRESS, 2017, p. 11). As a result, reusing building components may require expensive certification which includes material tests (Hradil, 2014, p. 20). Also, the aesthetic of the reclaimed building components may impede their reusability (Sassi b).

The overall image of the recycled products is negative in the construction industry (Kuhnhenne et al., 2018, p. 5). Hradil (2014, p. 20) says that: "…it is difficult to find companies specialised in deconstruction, designers willing to design from used elements and construction companies willing to build from used elements.". There may also be difficulties to get a building approval from the local authorities if reclaimed building elements are wished to be used (Hradil, 2014, p. 20).

It is also recognised that the lack of information flow prevents reuse of building parts. The information from the planned and on-going demolitions does not reach the potential customers (Hradil, 2014, p. 20). Huuhka (2008, p. 16) says that information bank for the reclaimed products should be established.

Currently the lifecycle analysis and objectives are missing from the construction project planning (Seppälä and Kajander, 2018) and without advance planning it is likely that the building components will end up to the landfills (Hradil et al., 2014, p. 50). The deconstruction of the building is not considered in the design phase of the building, which complicates the possible deconstruction and reuse at the end of the building's life cycle (Adams et al., 2017). Bougrain and Laurenceau (2017) claim that: "There is a lack of guidelines for architects (to create a building that is easier to deconstruct) …".

At the moment, the legislation does not impose the producers in the construction industry to take responsibility for their products throughout the whole lifecycle (Jaillon and Poon, 2013) and that can be one of the reasons, why lifecycle aspects are ignored and eventually lead building materials ending up as landfill waste. When the building materials are monitored during the whole life cycle of the building, this will alleviate their reuse (Mroueh, 2014).

In case of steel reuse, the literature recognises lack of guidance and education as barriers in the construction industry. For example, testing and designing with reused steel is challenging because there is uncertainty on how to perform it. (Densley Tingley et al., 2017).

It is also acknowledged that in overall there is lot of variability in the building components which leads to inconsistent quality and quantity (Kuhnhenne et al., 2018, p.11, Hradil et al., 2014, p. 19). Even though there are pre-demolition auditing process been done, they do not offer enough information about the quantity and quality of the materials in order to enable reuse (PROGRESS, 2017, p. 9).

When using salvaged building components, the client must adapt its plans to the dimensions available and this is likely to lead some compromises in the design of the building (Kuhnhenne et al., 2018, p. 68). The probability that the dimensions of the deconstructed building would match the new customer's exact preferences is very unlikely (Hradil et al.). However, this could be tackled partly by having more flexibility in the design phase of the building.

2.7 Measures to increase the reuse of the building parts

At the moment there is no fully functioning markets for the reclaimed building components (Meinander et al., 2012, p. 72) or in other words there is no demand or supply for the reclaimed building parts. Efficient economic incentives are needed to develop a market for second-hand building materials. In a case of steel there is a need for change from the current practice of using new materials to facilitate reuse of steel (Kuhnhenne et al., 2018, p. 14).

Hradil et al. (2014) state that regulation and legislation should be clear for reuse to occur and incentive bonuses should be increased to encourage reuse and recycling. Akinade et al. (2016) also stated that supportive legislation is needed for the deconstruction and reuse to propagate. One possible way to encourage this is to increase the price of landfilling (Kuhnhenne et al., 2018, p. 11) or raw materials with taxes (Meinander et al., 2012, p. 68) which would make reuse more tempting end-of-life cycle option. For example, high landfill fees are one reason, why recycling rates of CDW are high in countries like Denmark and Netherlands (Huuhka, 2008, p. 12).

In addition, the quality of the salvaged components needs to be assured in a cost-effective way to increase their market readiness (Huuhka, 2008, p. 16). Increasing the knowledge about reuse with education and guidance would dissipate the doubts that designers, constructors and clients have for reclaimed building components. As the image of the recycled products in the building construction is negative by the clients (Kuhnhenne et al., 2018, p. 5), the mindset of the customers also needs to change – customers need to accept second-hand building components as eligible building components (Sitra, 2014, p. 68).

The characteristics of the building components should be easily available and easily modifiable if needed. A standard certification system would reduce the testing costs. Non-destructive methods for testing should be utilised if possible. In some cases, testing could not be required, which would decrease the costs of reuse. (Hradil et al., Kuhnhenne et al., 2018, p. 11, Pun et al., 2006, Seppälä, 2018, p. 24).

Incentives are needed for a wider adoption DfD as this would facilitate the reuse of steel components especially (Kuhnhenne et al., p. 79). The deconstruction should be taken into account already in the design and construction phase of the building to alleviate reuse of the building components (Sitra, 2014, p. 59). For example, saving the original drawings of the building components and recording any changes happened to those would alleviate the possible future disassembly of the building (Gorgolewski et al., 2006, p. 55). Sitra (2014, p. 59) states in its report that construction companies should develop more solutions and technique related to modularity. In Finland more, experiences are needed from the selective deconstruction, which enables the reuse of the building parts. Kuhnhenne et al., (2018, p. 78) say that applying DfD principles would decrease the costs of deconstruction and recondition of steel components.

Reuse of building parts is assessed in the LEED and Green Star certification systems. Though the focus on the LEED is more directed to diverting the CDW away from the landfills (Keller, 2016). For example, in the newest LEED rating system construction waste management plan and tracking waste is required as prerequisite (Keller, 2016). Unfortunately, actually reusing building parts has very small impact for the total LEED and Green Star points. Talja (2013) proposes Green Demolition Certificate to encourage deconstruction and reuse.

3. Service lives of the building

In this chapter three different service lives for the building and its parts are defined. Also, the examples of reuse of building parts and DfD principles are presented.

3.1 Technical service life

Technical service life means the time after the inauguration in which structure's, component's, system's or device's operational requirements are fulfilled (Rakennustieto, 2008). It is the time, that building, or its part technically withstands wear and tear (Hekkanen, 2005). Technical service life for different building parts varies a lot which is demonstrated in the picture 1 below. The average technical service lives are based on the available information and experiences of the structure's, component's, system's or device's durability (Rakennustieto, 2008).

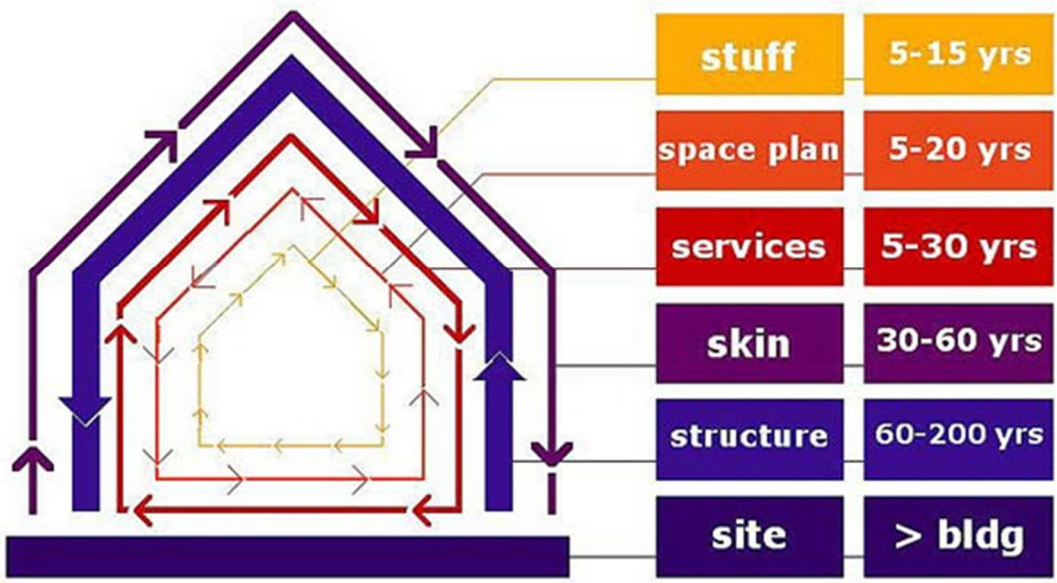

Picture 1. Shearing layers of a building adapted from Stewart Brand How Buildings Learn: What Happens After They're Built (http://www.locatearchitects.co.uk/seda-lg.htm)

The technical service life of the whole building varies a lot depending on its intended use, the design solutions, climate conditions and how much strain the usage of the building generates

(Rakennustieto, 2008). For ordinary buildings designed service life is 50 years (RIL, 2013, p. 44) but as said this can vary a lot. Even if the designed service life for the building is decided to be at most 50 years it is recommended that the load-bearing structures are designed for 100 years (RIL, 2013, p. 45). In a study done by VTT (Hradil et al., 2014, p. 17) the average age for demolished industrial and warehouse buildings was 37 years. Usually the technical service life of the building is very long, and thus does not impose the building's designed service life (Hekkanen, 2005).

As shown in the picture above, some of the building parts have a much longer designed service life than the average designed service life of the building as a whole and thus technically enabling reuse some of the building parts (Hradil, 2014, p. 4). The structure and with certain reservations skin have the best reuse potential from the technical perspective. Technical obsolescence is rare for building structures (PROGRESS, 2018, p. 133, RIL, 2013, p. 48).

3.2 Functional service life

Functional service life of the building means the time, that the building fulfils the requirements set by its use (Hekkanen, 2005). The building's functional service life comes to its end, when it is no more suitable for its intended use. Over time building's functionality is decreased by degeneration and or obsolescence (RIL, 2013, p. 22-23).

In case of reuse, functional service life of building parts may have come to its end because of the changes in the regulation which makes the parts obsolete for reuse (van den Brink et al., 2017). For example in Finland, building parts containing asbestos may not be reused even if they would have technical service life left.

3.3 Economic service life

Economic service life can be defined as a time, when it is appropriate to keep the building in function (Hekkanen, 2005). In the business world the time span may only be 10-20 years (or even less) and usually economic and functional service life are in determinative position when deciding the building's future (RIL, 2013, p. 24, Bäckgren, 2018). Economic service life may come to its end when the return on the investment does not satisfy the investor (RIL, 2013, p. 24). It is attractive from the economic point of view to demolish smaller buildings in the plot if there is a permit to build larger buildings.

3.4 Examples of reuse and DfD projects

3.4.1 Maxi-market

In 2003 Maxi-market was dismantled to make way for a new bigger shopping center, Sello. Size of the Maxi-market was approximately 16 000 sqm and about 16 209 tonnes of demolition waste was generated. There were clear objectives to utilise the waste as much as it was possible. As a result, almost 98% of the waste was directed to utilisation. 16% of the total waste was reused. Reusable parts were for example, façade elements, beams and lamps. (Kekki).

There were several reasons behind the high utilisation rate of the demolition waste. Good advance planning meant estimating the amount and quality of the waste and figuring out the possible targets

for utilisation before the beginning of the actual demolition work. To execute the actual demolition work, detailed explanations and guidance for demolition were composed. Cooperation and effective information flow between the participants were also important factors for successful waste utilisation in this project. (Kekki).

Even though the waste utilisation rate was very high (98%), the actual reuse rate was rather low (16%). However, it has to be remembered that this project was done before the rise of the circular economy principles. In that sense project was a good example about diverting the waste away from the landfills. Also, it demonstrated that it is possible to reach high utilisation rates with a proper advance planning and detailed guidance.

Picture 2. Demolition of the Maxi-market. Peter Jansson (https://www.is.fi/ruokala/ajankohtaista/art-2000005531671.html)

3.4.2 S-Market Urjala

In 2008, in Tampere SOK Pirkanmaa decided to replace its own owned discount store building of c. 2 000 sqm, built in the 1980's with a new Prisma hypermarket c. 10 000 sqm. Simultaneously SOK planned to build a new supermarket in Urjala. With this in mind it was decided to design the new supermarket in Urjala, so that part of the main structural components from the discount store building could be used in this new supermarket in Urjala. (Ungureanu et al., 2018, p. 78).

Because there were no significant changes in loading codes between the design of the original building (discount store) and the new building (supermarket) and the loading area for snow was the same, the structures were checked visually without mechanical testing. Structures were observed to

be in good condition. Only thing what had to be done, was adding fire protection (paint) to the roof struss structures because of the changes in the fire regulations. (Ungureanu et al., 2018, p. 79).

The contractor for both disassembling and reconstruction was Rakennusliike Ari Hiltunen. The bolted and screwed connections were easy to disassemble, and the process also enabled to recover the parts in good condition without damages. The concrete wall and plinth elements were not possible to recover without damage because they were grouted together. Also, the changes in the U-value's requirements, made reusing of wall elements difficult. In overall, reused parts consisted of steel frame (columns, main girders, cross-girders) and trapesoidal roof profiles. By reusing these parts, it was estimated around 10 % saving in the total construction costs. (Ungureanu et al., 2018, p. 78).

This example illustrates nicely why bolted, screwed or nailed connections should be favoured instead of using chemical connections (as grout in this example). It also brings up the risks related to the changes in the building regulations, which may prevent the possible reuse. Because the owner of the building parts remained the same, issues related warranties or resale could be dismissed.

3.4.3 Pikkulaiva

In Espoonlahti, Citycon decided to demolish its shopping center Lippulaiva in order to build a bigger shopping center in place of. Between the time of demolition of the old shopping center and construction of the new one, Citycon built a temporary shopping center, Pikkulaiva to the nearby plot. (Citycon, 2018).

The building's gross area is little less than 10 000 sqm. The actual construction was performed by Lehto Group and the building was designed by Mikko Juntura from Suunnitteluhuone Oy. According to Lehto, the building is owned by Citycon. The contract between the Lehto Group and Citycon includes in addition to the construction, deconstruction and relocation of the building. However, regarding to the relocation, the situation is currently open because there is no exact information about when the building is going to deconstructed and where the building will be located. (Vartiainen and Huhtala, 2019).

There were several reasons behind building a temporary building. From the City of Espoo's point of view, it was important to retain certain services for the area's residents. Also, there were not suitable spaces nearby, where the Citycon could have placed quite large amount (23 tenants) of storekeepers so temporary shopping center was ideal solution. From the storekeepers' point of view, they did not want to lose the customers to somewhere else. Also, because it was already known that the building will be deconstructed and relocated there were incentives to design the building for these actions. (Vartiainen and Huhtala, 2019).

The quality of the Pikkulaiva is thought to be the same as in "traditional" building and the costs were also said to be in the same price range as in "traditional" building. The difference to the "traditional" building is that the deconstruction and relocation aspects are thought in the design of the Pikkulaiva. (Vartiainen and Huhtala, 2019). All the design solutions in the building enable dismantling and reusing of the structure, building services and other elements (Savolainen, 2017). The building is easy to relocate after there is no use for the temporary shopping center (Citycon, 2018).

3.4.4 Hakaniemi's temporary market hall

In Hakaniemi, city of Helsinki decided to build a temporary, reusable market hall building for the time when the original market hall is under renovation and thus not available for the storekeepers. City of Helsinki also considered the possibility of acquiring temporary facilities from the nearby existing spaces, but they did not found as good solution as the temporary market hall in almost same location as the original market hall. (Malkki, 2019).

The building's gross area is 2 320 sqm and it was designed by the architect Jorma Öhman from the NVØ ky and built by Rakennusliike Koivukoski which is now part of the Lehto Group. City of Helsinki owns the building completely. The costs were around 3 million euros without the value added tax (VAT) which translates to about 1 300 € / sqm. Though these costs also include in addition to the actual construction, deconstruction and relocation of the building within a radius of 10 kilometres. (Malkki, 2019).

The main reasons behind building a temporary building were the location, time span and the image of the area. Because of the fear of customer's relocation during the time of the renovation of the original market hall, the temporary market hall was located right next to the original market hall as in the case of Pikkulaiva. The renovation of the original market hall is expected to last 2-3 years so there were incentives to design the building to be deconstructable and movable enabling potential reuse as the use in the current location is expected to end as the renovation of the original market hall is completed. The cityscape of the Hakaniemi's tori is perceived important as there are, for example lot of tourists visiting. This eliminated the possibility of building a more modest type of building to the area like for example, barrack building. (Malkki, 2019).

The construction costs of the temporary market hall were estimated to be about the same as in "traditional" construction or maybe even less. Also, the quality of the temporary market hall is estimated to be almost same as in "traditional" building though electric heating is not used in the temporary market hall. The shopkeepers have also expressed their contentment to the building. (Malkki, 2019).

The temporary market hall has now been in use for almost one year and it is expected to be in market hall use until spring of 2021. There have been some considerations about the possible future use of the temporary market hall but at the moment it is unclear where and in which kind of use the hall building will end up. (Malkki, 2019).

Picture 3. Hakaniemi's temporary market hall. Olli-Pekka Pajala

4. Business models in construction industry

This chapter reviews different business models in the construction industry and investigates their usability in case of reuse of building parts.

4.1 Definition of the business model

A business model in general should tell how the company organises its activities to create value for its customers and capture profits (Cherif and Grant, 2013). It is the company's value creation logic (Pekuri et al., 2013). Albeit there are multiple definitions to business model, they usually include the following elements: customer value creation, earning logic, value of network of a firm and resources and capabilities of the firm and strategic decisions, choices and principles (Pekuri et al., 2013).

The chosen business model aims to give competitive advantage to the company over its competitors (Johnson et al., 2008). This can be achieved by differentiating the business model from the competitors to better meet the customer's needs (Morris et al., 2003). However, for a company to succeed in the long run, capturing the value (making profit) created for its customers is essential (Chesbrough and Rosenbloom, 2002). A Finnish study done by Pekuri et al. (2013) found that business models among the construction companies do hardly differ from each other: price is usually the only distinctive factor when competing for building projects.

4.2 Traditional business model

Typically, the profit for the contractor comes from the initial buyer of the building (either investor or user owner) in a lump sum or in sections (as the building achieves certain stages of completion) depending on the contracts. That is the contractor sells the ownership of the building. After the completion of the building the ownership and maintenance responsibility transfers to the buyer/owner of the building. Contractor is still responsible for faulty parts or installations. In Finland unless otherwise settled the warranty period is two years, during the time which the contractor is responsible to fix its mistakes that have occured during that time (YSE, 1998). After the warranty period the contractor is still responsible for mistakes that have occurred for example, because of the contractor's serious neglect (YSE, 1998). The warranty period for this kind of errors is ten years (YSE, 1998).

In Finland contractors are mainly interested in quick returns by selling the assets to the investors or user owners – they do not have goals for long-term recurring cash flows from the property (KTI, 2010). Because in the traditional business model the contractor does not have interest on the building's operation after its completion and delivery, focus is concentrated on the short-term cost savings (Rajakallio et al., 2016). This is usually achieved by chopping the whole project into small entities which are tendered and normally the lowest bargain price is the determinative factor (Pekuri and Haapasalo, 2012).

4.3 Life cycle model (PPP model)

In Finland life cycle model (internationally) public private partnership (PPP) have mainly been used in the building construction in connection with schools and nurseries (Tompuri, 2018). Basically, in the PPP model, the service provider takes the responsibility of the design, construction and

maintenance of the building for a certain agreed time period (usually quite long 15-30 years) (Rakennusteollisuus, 2019). After the completion of the building begins the service period during which the client pays a (usually monthly) service fee (which could include the costs of construction) for the service provider (Korhonen and Rontu, 2013, p. 8).

Depending on the project the client may pay the costs of construction in the beginning of the project or when the building is completed. In this case the client pays only use and maintenance costs after the completion of the building and receives the ownership of the building. It is also possible for the client to pay the costs of construction little by little in connection with the service fee. In this case the ownership of the building remains with the service provider (usually a project specific PPP company is established for this purpose) but there can be some redemption option for the client after the service period is ended. In this case the initial costs of construction are financed by the PPP company. (Rautio, 2014, p. 13-14).

4.4 Leasing / service model

Leasing the building parts would mean that the contractor or other service provider would retain the ownership of the building parts, and the customer would lease the parts for a certain amount of time and pay provision for that (Ploeger at al., 2017). The maintenance responsibility of the building parts could be decided separately between the participants depending on the characteristics of the parts and the leasing period. Leasing the building parts would reduce the initial costs to the buyer/owner and possibly release capital to other projects. On the other hand, profits for the contractor or service provider would spread over a longer time period.

Leasing the building parts would increase long-term assets in the contractor's or service provider's balance sheet, and potentially have negative effects for the contractors which do not have high equity on their own. Their capital would be tied for longer time period which would have negative effect on their liquidity and solvability. (Ploeger et al., 2017).

Moreover, for the building to function properly it needs all of its components together, so distributing the ownership of different building parts should not affect the use of the property. This could be solved by carrying out highly specific contracts between different participants or establishing a consortium which would hold the ownership rights of the entire building. At the end of the building's life cycle the parts would be returned to the right owners. (Ploeger et al., 2017, van den Brink et al., 2017).

In the world there are not many examples of leasing building parts. Mitsubishi Elevator Europe offers the possibility of leasing the elevator and at Delft there is a pilot project regarding leasing the façade. In this project one section of the façade on a low-rise building in the TU Delft was replaced by state-of-the-art façade. Aim of this state-of-the-art façade is to improve the energy performance of the building by applying the latest technological innovations in the façade. The project also investigates how to develop financing structures, operational services and complex system of contracts in order to make leasing of the façade a feasible option for owning the façade. (Ploeger et al., 2017, TUDelft).

4.5 Business model's suitability for DfD and reuse

In the traditional model the costs of construction are paid by the initial owner and the possible benefits of the easy deconstruction are possibly received by another owner, the traditional business model does not support the initial owner to have an additional investment for easy deconstruction (Hirigoyen, 2016). Additionally, as the contractor tries to minimise the costs related to the construction (KTI, 2010) and because the responsibility of the building parts transfers to the owner, the contractor either has little incentives to apply DfD principles.

In the leasing model, the building parts end-of life cycle use (after the leasing period) is seen as a big uncertainty for the contractor or possible service provider. For some of the building parts the estimated service lives are long and the regulation may change over time and future building materials might be markedly different then today, these increase the risk for the building parts' end-of-lifecycle use (van den Brink et al., 2017). The building parts should also be able to dismantle without damaging them and thus ensuring the possibility for reuse.

5. Investment calculations in real estate industry

In this chapter the valuation methods for real estates are reviewed especially focusing on the discounted cash flow method.

5.1 Valuation in general

Usually valuers try to estimate the market value of the property, which can be defined as the most probable sale price of the property. It is also common to assume that the possible buyer is an investor especially in commercial properties. To estimate the market value, valuers typically utilise three different approaches: the income approach, the cost approach and the sales comparison approach. These can be used simultaneously or separately and, in some cases, values derived from different approaches are compared with each other to assure their relevance. The data used for making valuations should be as reliable, expedient and up-to-date as possible, but this is not always the case and thus values derived from different approaches may differ a lot from each other. (Fisher and Louziotis Jr, 2013).

There are numerous factors affecting to the level of the rent that the commercial building generates and eventually to the market value of the real estate. These factors can be divided for example, into physical, external economic and internal economic factors. Physical factors include among other things the location, physical condition and functional fitness of the property. External economic factors are for example, the market situation in the area and inflation rates. Internal economic factors can include built-in lease terms and tenants' turnovers. (Bailey, 1984, Virtanen, 1990, p. 83-84).

Arguably the location of the property (in micro and macro-level) is the most important factor and its best location will vary a lot depending on the customer and industry (Riihimäki and Siekkinen, 2002, p. 3). For example, for the retail property, location in the vicinity of the main traffic hubs and major cities (and thus the possible customers) will increase the rent levels when compared to the building with remote location and thus worse accessibility. In general, the closer the property is located to the city centre, the more valuable is its land value.

The building specific factors relate to the condition of the building and its layout; how it works for its intended use. For example, for industrial buildings, a certain height may be required by the tenant for it to operate properly in the building.

Value of the property is also dependent on the position of the owner. For the investor owner the above-mentioned factors are very important, because the property's goal is to generate as much cash flow as possible in its intended investment horizon. Not that these factors would not be important for the user owner, but the user owner might emphasise different matters as the property's objective is to support its main business operations (Krumm and de Vries, 2003).

5.2 Income approach

When it comes to estimating the commercial property's productivity, the income approach is usually applied because it gives the most accurate description of the cash flows involved into the property (Vimpari and Junnila, 2013). As the real estates are traded infrequently, the transaction data is

usually partially insufficient. That is also the reason why valuations are needed (Fisher and Louziotis Jr, 2013).

The income approach usually starts with estimating the net operating income (NOI) of the property. The net operating income does not include any costs or profits related to financing or taxes. NOI generally follows this pattern:

Rental income at full occupancy

+ *Other income (i.e. parking)*
= *Potential gross income (PGI)*
– ¬*Vacancy*
= *Effective gross income (EGI)*
– *Operating expenses (OE)*
= *Net operating income (NOI)*

After the NOI has been estimated there are two ways to apply the income approach to property valuation by utilising the NOI: the direct capitalisation method and the discounted cash flow (DCF) method. (Fisher and Louziotis Jr, 2013).

5.2.1 Direct capitalisation

In the direct capitalisation method, the market value is derived by dividing the first-year NOI by capitalisation rate (cap rate). Capitalisation rate can be thought as a rate of return that property will generate based on its current market value. In some cases, it might be appropriate to make modifications to the first-year NOI, if the first-year NOI is not representative for the building's future profit-making capability. Capitalisation rate, on the other hand, tells the expected future growth of the NOI implicitly. The capitalisation rate is usually estimated by the sales of the comparable assets from the markets. In Finland the information relating to the transactions is usually not published, which makes evaluating the cap rate (yield) very challenging and insecure. That also makes the cap rate the most uncertain parameter affecting the property value. In overall direct capitalisation gives easily and quickly an approximation of the property's value. The formula for the market value is presented below.

Market value = NOI / Cap rate

(Vimpari and Junnila, 2013, Fisher and Louziotis Jr, 2013).

5.2.2 Discounted cash flow (DCF)

The DCF method projects the future NOIs of the property and discounts the future profits and resale price to the present to obtain the market value of the property. The discount rate is usually defined by adding the growth rate to the cap rate. In the Finnish property valuation tradition, the growth rate is usually defined as the inflation rate. The formula for the discount rate is presented below.

Discount rate = Cap rate + Growth rate

(Vimpari and Junnila, 2013, Fisher and Louziotis Jr, 2013)

When using the DCF method, a holding period of 10 years is usually applied, though in some cases it might be longer or shorter, depending on e.g. the lengths of the lease agreements and the characteristics of the property. In general, 10-year holding period is preferred because projecting cash flows beyond that comes increasingly more difficult. (Fisher and Louziotis Jr, 2013).

In the 10-year case, the NOIs of the first 10 years are discounted to the present by using the discount rate. The resale value is defined by using the 11th year's NOI and dividing that with the (terminal) cap rate, so in a sense, using the direct capitalisation method. Then this value is also discounted to the present. The terminal cap rate may be the same as the cap rate used for defining the discount rate. However, it may also vary – in case valuer thinks that there are good reasons for that, for example if the saleability of the building is low due to special use of it (meaning higher cap rate and lower resale value). Because usually there is lot of uncertainty related to the future, using higher terminal cap rate is usually applied. (Fisher and Louziotis Jr, 2013).

In the DCF method, there are practically four key input parameters: rent (€/sqm/mth), operating expenses (€/sqm/mth), vacancy (%) and cap rate (%). It is also common to divide the operating expenses into maintenance costs and repair costs. The figures for the parameters are gathered from the current lease agreements, property information and market information. Uncertainty related to the data sources usually comes from the property information and market information, whereas data gathered from lease agreements is often coherent. The uncertainty translates to uncertainty about the cash flows and eventually uncertainty about the value of the property. This can be partially tackled by the hard work by the valuer (e.g. confirming the rent levels from the rental agents). (Vimpari and Junnila, 2013, French and Gabrielli, 2005).

To acquire an accurate and reliable estimate of the property value by using the DCF method, requires quite a lot of detailed information about the markets and the property itself. Even if the information is available, small variations in the parameters may have a significant impact to the property value, especially when varying the cap rate. As the DCF method is based on many assumptions, there are quite many points where the valuer can make a flawed assumption. For example, the discount rate does not reflect the risk appropriately or the repair costs are underestimated. (Fisher and Louziotis Jr, 2013).

6. Economic view of the reuse of building and its parts

To solve the economic feasibility of DfD and reuse of building parts, discounted cash flow method was utilised with different emphasis between calculations. The calculus compares the net present values and discounted residual values between a building not designed for deconstruction (traditional) and a building designed for deconstruction. Also, a leasing option of the building parts is presented. The feasibility is viewed from the investor's point of view.

6.1 Property information

The subject property of the calculus is located in Tampere and its leasable area is 1 294 square meters. The building is used as a warehouse. It has a steel frame, corrugate sheets in the roof and the wall consists of sandwich panels. In the calculus it is presumed that the building is new.

In the first calculation it is assumed that building stays in its intended use. In the second calculation it is assumed that after certain holding period, the building is deconstructed and parts of it are used as a components (reuse) or as material (recycle). As for the reuse scenario it is assumed that the steel structure, roof structure and the skin (sandwich panels) are reused as components. In the recycle scenario the steel parts are assumed to be sold as a scrap steel. The third calculation investigates the meaningfulness of leasing the building components instead of traditional ownership.

6.2 Traditional DCF calculations

Aim of the calculus is to compare two buildings' net present values together. The first building (Scenario 1) has not been designed for deconstruction and has thus lower initial construction costs. The second building (Scenario 2) has been designed for deconstruction and thus has higher initial construction costs. These construction costs are the initial costs that the investor must pay. The extra investment for the DfD building was ca. €61K meaning approximately 5,6% higher initial construction costs. Net present value is calculated by subtracting the initial construction costs from the market value of the property. Market value is calculated with the 10-year discounted cash flow.

The following parameters has been used in the calculations:

Leasable area (sqm)

+ *Construction management (€/sqm)*
+ *Area and groundworks (€/sqm)*
+ *Structures and skin (€/sqm)*
+ *General construction (€/sqm)*
+ *Building services (€/sqm)*
= *Total construction costs (€/sqm)*

Vacancy (%)

Market rent (€/sqm/mth)
Operating costs (€/sqm/mth)

Repair costs (€/sqm/mth)

+ *Yield (%)*
+ *Inflation / growth rate (%)*
= *Discount rate (%)*

The information regarding the leasable area and construction costs for the traditional building were received from the Ruukki Construction Oy. Ruukki's estimated costs for the warm hall building have been compared to the costs of light industrial hall and storage hall from Haahtela's Talonrakennuksen kustannustieto (2013). Cost estimate from the Haahtela's book (2013) was slightly higher but is has to be remembered that the construction costs may vary quite heavily depending on the project specifications. In overall the construction for the traditional building can be assumed quite accurate.

Higher construction costs for the DfD building were assumed to come from the higher costs for structures and skin (because of needing more steel and connections) and construction management (more detailed construction plans). Higher steel consumption may be reasoned due to suitability of the structures to a higher load conditions in the future and thus improving their reusability. The construction management costs and structures and skin costs were estimated to be 15% higher when compared to the traditional building. In total construction costs for the DfD building were estimated to be around 5,6% higher than construction costs for the traditional building. These costs were estimated independently and thus they hold some uncertainty.

Market related information about Tampere (yield, vacancy, market rent) was gathered from the recent market reports published by Newsec (2018), Catella (2018) and Cushman & Wakefield (2018). Depending on the source, the yield had a range of 6 -11%, vacancy 1 – 6% and market rent 4 – 10 €/sqm/mth. As a comparison the rent level in the best logistics area in the Helsinki Metropolitan area was around 10-11 €/sqm/mth in 2018 (KTI, 2018, p. 63).

Because of the assumption of the new building, yield was estimated to be in the lower end of the range and the market rent in the upper end of the range. Vacancy was estimated to be slightly lower than the "average" of the both ends. Operating and repair costs were estimated based on the information regarding industrial and warehouse operating costs (which did not include repair costs) of whole Finland received confidentially from KTI. Growth rate of 2% was based on the European Central Bank's goal to keep the inflation rate near 2% (Bank of Finland, 2018).

In the base calculation all the figures are the same for both of the buildings except for the total construction costs which are higher in the DfD building (Scenario 2). Figures can be seen from the table 2 below.

Table 2. Parameters for the DCF calculations

	Scenario 1	Source	Scenario 2	Source
Construction costs (€/sqm)	838,4	Ruukki	885,4	Own estimate
Leasable area (sqm)	1 294	Ruukki	1 294	Ruukki
Vacancy (%)	3,0 %	Newsec, Catella, Cushman & Wakefield	3,0 %	Newsec, Catella, Cushman & Wakefield
Market rent (€/sqm/mth)	8,0	Newsec, Catella, Cushman & Wakefield	8,0	Newsec, Catella, Cushman & Wakefield
Operating costs (€/sqm/mth)	2,0	KTI	2,0	KTI
Repair costs (€/sqm/mth)	0,2	Own estimate	0,2	Own estimate
Yield (%)	7,0 %	Newsec, Catella, Cushman & Wakefield	7,0 %	Newsec, Catella, Cushman & Wakefield
Inflation / growth rate (%)	2,0 %	European Central Bank	2,0 %	European Central Bank
Discount rate (%)	9,0 %	Newsec, Catella, Cushman & Wakefield + European Central Bank	9,0 %	Newsec, Catella, Cushman & Wakefield + European Central Bank

These figures give the cash flow presented below in the table 3. In the Scenario 1 total construction costs were estimated to be ca. €1,08M and in Scenario 2 €1,15M. The discounted cash flow from the first 10 years was estimated to be ca. €598K and with the discounted residual value of ca. €635K, the market value for the property was estimated to be ca. €1,23M.

Table 3. Cashflow calculations

Year	1	2	3	4	5	6	7	8	9	10	11
Potential Gross Income	124 224 €	126 708 €	129 243 €	131 828 €	134 464 €	137 153 €	139 896 €	142 694 €	145 548 €	148 459 €	151 428 €
Vacancy (%)	3 %	3 %	3 %	3 %	3 %	3 %	3 %	3 %	3 %	3 %	3 %
Effective Gross Income	120 497 €	122 907 €	125 365 €	127 873 €	130 430 €	133 039 €	135 700 €	138 413 €	141 182 €	144 005 €	146 886 €
Operating Costs	-31 056 €	-31 677 €	-32 311 €	-32 957 €	-33 616 €	-34 288 €	-34 974 €	-35 674 €	-36 387 €	-37 115 €	-37 857 €
Repair Costs	-3 106 €	-3 168 €	-3 231 €	-3 296 €	-3 362 €	-3 429 €	-3 497 €	-3 567 €	-3 639 €	-3 711 €	-3 786 €
Net Operating Income (NOI)	86 336 €	88 062 €	89 824 €	91 620 €	93 453 €	95 322 €	97 228 €	99 173 €	101 156 €	103 179 €	105 243 €
Present value of NOI	79 207 €	74 120 €	69 360 €	64 906 €	60 738 €	56 837 €	53 187 €	49 771 €	46 575 €	43 584 €	40 785 €
Residual Value (RV)											1 503 467 €
Present value of RV										635 081 €	

With these figures both scenarios produce positive NPV: Scenario 1 ca. €148K and Scenario 2 ca. €88K. So, with the base figures Scenario 1 ca. €61K more profitable than Scenario 2. If the NPV would be negative, it would not be profitable for the investor to invest at all to the building. To solve the economic feasibility of DfD building when compared to the traditional building, break-even analysis and sensitivity review was performed. For DfD building to break-even yield would have to be 6,67% or market rent would have to be 8,28 €/sqm/mth or operating costs would have to be -1,73 €/sqm/mth ceteris paribus. Impact of these three parameters can be seen from the figures 2-4 below.

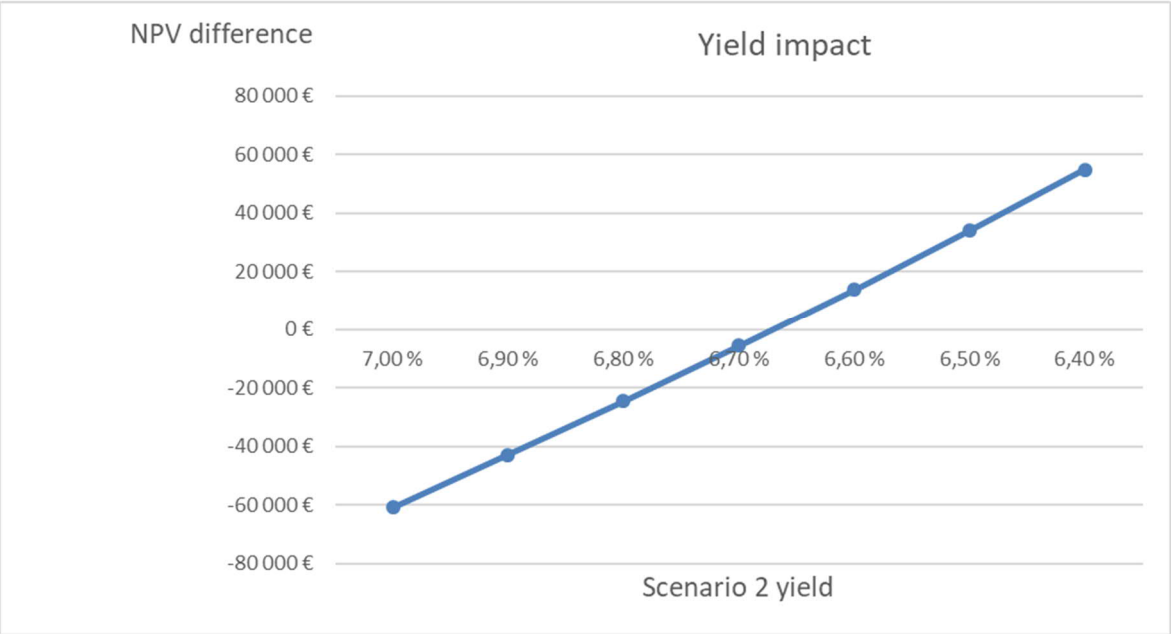

Figure 2. Scenario 2 Yield impact on the NPV difference

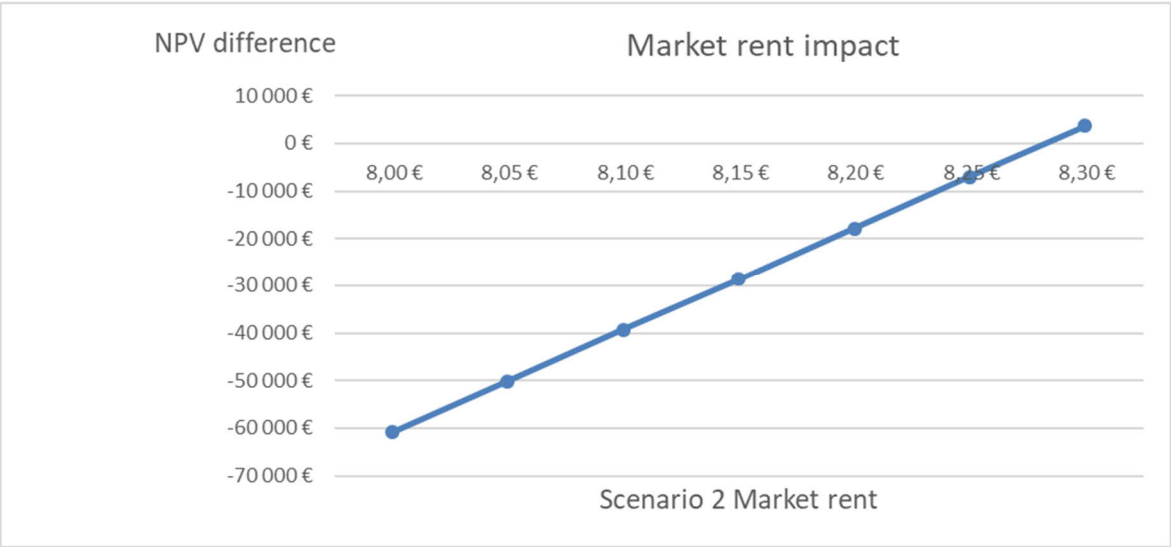

Figure 3. Scenario 2 Market rent impact on the NPV difference

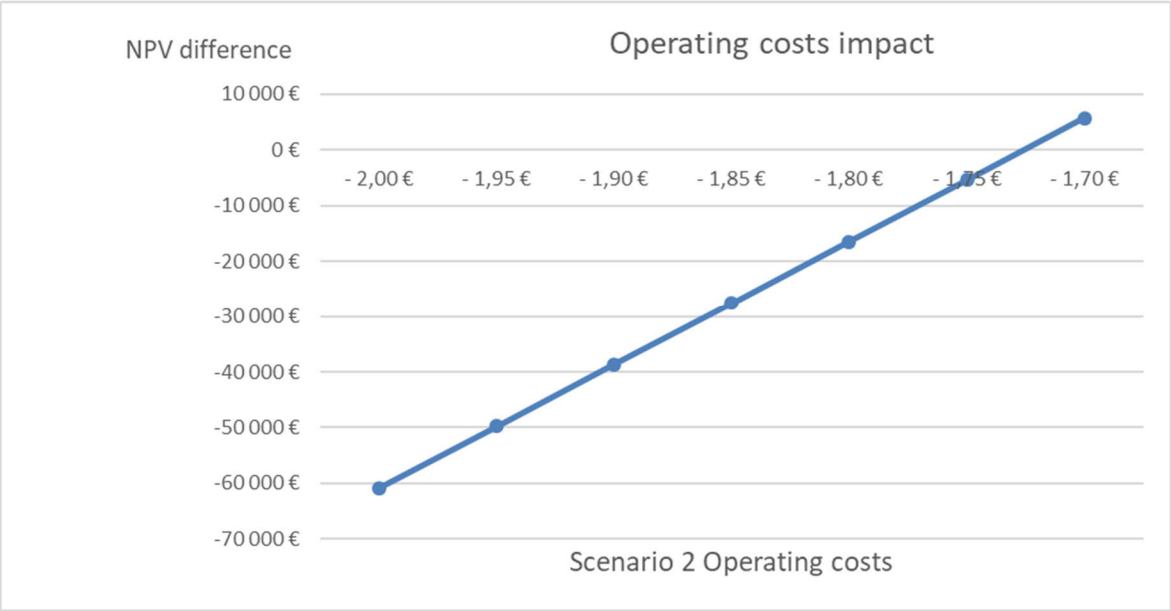

Figure 4. Scenario 2 Operating costs impact on the NPV difference

Lower yield for the DfD building could be explained by the reduced risk related to the end-of-life use of the building but it is uncertain how the market players would price this benefit as it possibly occurs far in the future. In the study done by Vimpari and Junnila (2013) there were seen to be 0,1-0,3% lower yield for an office building with premium level certificate (LEED Platinum) when compared to non-certified office building. However, as the DfD does not currently have any certifications, it is hard to believe that DfD would have such a big effect on the yield.

Higher market rent could be explained by the better environmental image of the DfD building but again it is uncertain how the market players would price this. In Vimpari and Junnila's study (2013) the effect of the premium level certificate to rent (€/sqm/mth) was estimated to be positive but quite

dispersed. The higher market rent for green buildings (LEED or Energy Star certification) when compared to conventional buildings in the same area was also discovered by Fuerst and McAllister (2010).

Lower operating costs could be explained by the benefits of using DfD principles which include for example, building components which are easier to maintain, repair or exchange (Webster and Costello, 2005). However, it is questionable how much would be the effect of these principles.

In the sensitivity analysis, effects of small changes in predetermined parameters are calculated for the NPV difference (ca. €61K). Aim is to find out combinations that would make DfD building more profitable when compared to the traditional building. In the table 4 below is calculated changes in the yield and market rent in DfD building. Figures with green background illustrate when DfD building would be more profitable and figures in red background illustrate when the traditional building would be more profitable.

Table 4. Sensitivity analysis of yield and market rent

		Scenario 2 Market rent (€/sqm/mth)						
	-60 870 €	8,00 €	8,05 €	8,10 €	8,15 €	8,20 €	8,25 €	8,30 €
Scenario 2 Yield	7,00 %	-60 870 €	-50 111 €	-39 352 €	-28 594 €	-17 835 €	-7 076 €	3 682 €
	6,95 %	-51 997 €	-41 161 €	-30 324 €	-19 488 €	-8 652 €	2 184 €	13 020 €
	6,90 %	-42 995 €	-32 080 €	-21 166 €	-10 251 €	664 €	11 578 €	22 493 €
	6,85 %	-33 862 €	-22 867 €	-11 873 €	-879 €	10 115 €	21 110 €	32 104 €
	6,80 %	-24 594 €	-13 519 €	-2 444 €	8 631 €	19 706 €	30 781 €	41 856 €
	6,75 %	-15 190 €	-4 032 €	7 125 €	18 282 €	29 439 €	40 596 €	51 753 €
	6,70 %	-5 644 €	5 596 €	16 836 €	28 077 €	39 317 €	50 558 €	61 798 €

Even though the high-ends of both parameters (yield 6,7%, market rent 8,3€/sqm/mth) might be difficult to achieve, combination of small decrease in the yield and small increase in the market rent might be possible to achieve. And if the initial construction costs of DfD building would be slightly lower from the current estimate, feasibility of DfD building could be proven by DCF method. But again, there is a lot of uncertainty related to the changes in this parameters.

In the table 5 below is presented the effects of changing yield and construction costs of DfD building. As the low-end of the yield (6,7%) would be most likely really difficult to achieve, the construction costs of DfD building would have to decrease quite a lot from the current estimate of 885€/sqm, for the DfD building to be more profitable than the traditional building. If the construction costs of DfD building would increase from the current estimate, the feasibility of DfD building would be very hard to achieve.

Table 5. Sensitivity analysis of yield and construction costs

		Scenario 2 Construction costs (€/sqm)						
	-60 870 €	-915	-905	-895	-885	-875	-865	-855
Scenario 2 Yield	7,00 %	-99 690 €	-86 750 €	-73 810 €	-60 870 €	-47 930 €	-34 990 €	-22 050 €
	6,95 %	-90 817 €	-77 877 €	-64 937 €	-51 997 €	-39 057 €	-26 117 €	-13 177 €
	6,90 %	-81 815 €	-68 875 €	-55 935 €	-42 995 €	-30 055 €	-17 115 €	-4 175 €
	6,85 %	-72 682 €	-59 742 €	-46 802 €	-33 862 €	-20 922 €	-7 982 €	4 958 €
	6,80 %	-63 414 €	-50 474 €	-37 534 €	-24 594 €	-11 654 €	1 286 €	14 226 €
	6,75 %	-54 010 €	-41 070 €	-28 130 €	-15 190 €	-2 250 €	10 690 €	23 630 €
	6,70 %	-44 464 €	-31 524 €	-18 584 €	-5 644 €	7 296 €	20 236 €	33 176 €

As part of the DfD principles there is also a possibility to exchange the used building parts easily that could transfer to lower operating costs for the building in its life cycle. In the table 6 below is presented the effects of changing market rent and operating costs of DfD building.

Table 6. Sensitivity analysis of market rent and operating costs

		Scenario 2 Market rent (€/sqm/mth)						
	-60 870 €	8,00 €	8,05 €	8,10 €	8,15 €	8,20 €	8,25 €	8,30 €
Scenario 2 Operating costs (€/sqm/mth)	-2,00 €	-60 870 €	-50 111 €	-39 352 €	-28 594 €	-17 835 €	-7 076 €	3 682 €
	-1,95 €	-49 778 €	-39 020 €	-28 261 €	-17 502 €	-6 744 €	4 015 €	14 774 €
	-1,90 €	-38 687 €	-27 928 €	-17 170 €	-6 411 €	4 348 €	15 107 €	25 865 €
	-1,85 €	-27 595 €	-16 837 €	-6 078 €	4 681 €	15 439 €	26 198 €	36 957 €
	-1,80 €	-16 504 €	-5 745 €	5 013 €	15 772 €	26 531 €	37 289 €	48 048 €
	-1,75 €	-5 413 €	5 346 €	16 105 €	26 863 €	37 622 €	48 381 €	59 139 €
	-1,70 €	5 679 €	16 437 €	27 196 €	37 955 €	48 714 €	59 472 €	70 231 €

Scenario 1 overall conclusions

In overall DCF method is prone for small changes which will have huge impact for the overall results. And as there is quite a lot of uncertainty related to the possible monetary benefits of DfD (in this case lower yield, lower operating costs and higher market rent) in this scenario these results should be viewed carefully. For example, for the yield to decrease below 6,67% is pretty unlikeable or in other words it would be pretty questionable if the investor would decrease its yield requirement that much because of the lower risk regarding the end-of-life use of the building. If there would be clear tangible examples (like truly lower operating costs) of the benefits of DfD, it would be easier to convince the investor to have an extra investment in the beginning. Now the results show that in many scenarios multiple parameters should change for the DfD building to become more profitable than the traditional building.

6.3 Residual value calculations (reuse vs. recycle)

In the second calculation aim was to investigate the meaningfulness of DfD and reuse instead of the current practice of not DfD and recycling. In other words, aim was to resolve if it is profitable to have a slightly higher investment (in this case ca. €61K) in the beginning which would give more profit in the deconstruction/demolition phase of the building. Time periods used in this scenario were 10, 20 and 30 years. The comparison was done for the discounted residual values.

The basic information and calculation were the same as in DCF calculations except for the residual value calculations. Also, the wall area of 1 280 sqm was utilised in this calculation to calculate the deconstruction costs of the skin and its resale price. When in the DCF calculation residual value was calculated by the direct capitalisation and then discounting that value to the present (assuming that the building will stay in its current use) in this second calculation residual value is calculated by creating two options for the building in the end of its life cycle and calculating values for those and then discounting these values to the present. The two options were recycle for the traditional building (Scenario A) and reuse for the DfD building (Scenario B). The cost items for both cases were based on the cost division received confidentially from VTT.

In the reuse option the following parameters were used for the residual value calculations:

+ *Steel structure deconstruction costs (€/sqm)*
+ *Roof structure deconstruction costs (€/sqm)*
+ *Roof insulation and membrane deconstruction costs (€/sqm)*
+ *Skin deconstruction costs (€/ wall sqm)*
+ *Other deconstruction costs (€/sqm)*
= *Deconstruction costs*

Transportations

Transportation distance (km)
Transportation cost (€/km)

Storage space (sqm)

Storage time (mth)
Storage costs (€/sqm/mth)

+ *Steel structure (€/sqm)*
+ *Skin (€/wall sqm)*
+ *Roof structure (€/sqm)*
+ *Testing (€/sqm)*
= *Preparing for reuse costs*

Other than steel recyclable material (t)

Recycling costs (€/t)
Landfill material (t)
Landfill costs (€/t)

Resale price of steel structure (€/sqm)
Resale price of roof structure (€/sqm)

Resale price of sandwich panels (€/wall sqm)
Steel structure depreciation rate, 10-year (%)
Roof structure depreciation rate, 10-year (%)
Sandwich panels depreciation rate, 10-year (%)

In the recycle option the following parameters were used for the residual value calculations:

+ *Steel frame (t)*
+ *Sheets (t)*
+ *Sandwich panels (t)*
= *Total sellable steel*

+ *Steel structure demolition costs (€/sqm)*
+ *Roof structure demolition costs (€/sqm)*
+ *Roof insulation and membrane demolition costs (€/sqm)*
+ *Skin demolition costs (€/ wall sqm)*
+ *Other demolition costs (€/sqm)*
= *Demolition costs*

Transportations

Transportation distance (km)
Transportation cost (€/km)

Other than steel recyclable material (t)

Recycling costs (€/t)
Landfill material (t)
Landfill costs (€/t)

Resale price of steel (€/t)

The amount of sellable steel (t) was received from Ruukki Construction Oy, based on the design drawings of the building. Resale price of steel was estimated based on the Dunant et al. study (2018). The resale price of steel should be quite reliable estimate as there are functioning markets for the scrap steel.

Deconstruction costs for the reusable parts was received from the Ruukki Construction Oy, based on the costs of assembly of those parts. Other deconstruction costs were estimated based on the Boost Brother's estimate about the deconstruction costs of the building in question by deducting the costs of the reusable parts from the total costs. Total demolition costs were estimated to be 11% lower than the total deconstruction costs as demolition is usually less time-consuming and more

straight-forward methods can be utilised. Generally, these demolition/deconstruction costs may vary heavily depending on the project specifications and in Haahtela's book (2013, p. 195) range for demolition costs was estimated to be 6 – 15 € / cubic meter for wooden and stone buildings. In the examples founded from the cities' and municipalities websites, the costs of demolition varied between 30-130 €/sqm. The higher costs usually include removing of the hazardous material like asbestos. The high uncertainty related to the deconstruction and demolition costs is mitigated by conducting a sensitivity analysis on these parameters. Deconstruction and demolition costs were also clearly the biggest cost items in the end-of-life reviews estimated in this calculation. However, it has to be remembered that the example demolition costs which were found, reflects today's situation where the buildings that are demolished were not designed for deconstruction and thus for reuse.

Transportation costs were estimated based on the figures from the HB-Betoni's web page (2017). In the reuse option it was assumed that in total there would be six transportations and the length of each journey was assumed to be 100 kilometres. This would cover the transportation of the recyclable and landfill material to the repository and transportation of the reusable parts to the temporary storage and from there to their new location. In the recycle option total number of transportations is assumed to be four because of the no need for the temporary storage. Length is also assumed to be the same 100 kilometres. Even though there are uncertainties related to these figures, the overall costs of transportation is very marginal in the total costs.

The needed storage space (sqm) was estimated based on the dimensions of the building. Storage time (mth) was estimated independently. Storage costs (€/sqm/mth) were estimated based on the market reports published by Newsec (2018), Catella (2018) and Cushman & Wakefield (2018). The amount of these costs was estimated to be very marginal in the overall costs so even though storage costs include uncertainty about the space and time, their impact on the overall costs is quite minor.

Preparing for reuse costs which include steel structure (€/sqm), roof structure (€/sqm), sandwich panels (€/wall sqm) and testing (€/sqm) were based on the information received from the Ruukki Construction Oy. These figures have been compared with cost figures from the study done by Dunant et al. (2018) about the preparing for reuse costs for a steel beam in the United Kingdom. The estimated costs received from Ruukki were in overall lower than the figures calculated based on the UK study. One reason for this was that in the UK study, the buildings and its parts were built in the past and deconstructed now so the reuse and DfD aspects (including for example, CE-marking and proper documentation) have probably been inadequate. Also, the preparing for reuse costs were estimated for a single steel beam not for the whole structure. In this study it is thought that the steel structure, roof structure and the skin are used as such, not transferred into single steel beams.

The amount of recyclable and landfill material was estimated independently. The costs for landfill material was drawn from the website of the waste management company called Kiertokapula Oy (2019). The recycling cost was estimated independently. The overall impact of these costs was also estimated to be quite little.

Resale price of components (steel structure, roof structure and sandwich panels) were based on the original cost of these components which was received from Ruukki Construction Oy and then using some depreciation percentage to estimate their potential resale price. These depreciation rates were estimated based on the discussions with Ruukki Construction Oy.

Estimate for the components' resale price contains much more uncertainty than the estimate for the resale price of steel material. As said before from the technical point of view 10-year-old steel structure is almost as new but its commercial value is much harder to define as the probability that some new potential customer would need dimensionally almost the same steel structure is low (Hradil et al.).

In the table 7 below can been seen the estimated figures for the traditional building with recycle scenario and in the table 8 the estimated figures for the DfD building with reuse scenario.

Table 7. Parameters for the recycle option

Scenario A recycle		Source
Steel frame (t)	43	Ruukki Construction
Sheets (t)	18	Ruukki Construction
Sandwich panels steel part (t)	11	Ruukki Construction
Steel structure demolition costs (€/sqm)	-6,3 €	Own estimate
Roof structure demolition costs (€/sqm)	-4,9 €	Own estimate
Roof insulation and membrane demolition costs (€/sqm)	-8,4 €	Own estimate
Skin demolition costs (€/sqm)	-10,5 €	Own estimate
Other demolition costs (€/sqm)	-114 €	Own estimate
Transportations	4	Own estimate
Transportation distance (km)	100	Own estimate
Transportation cost (€/km)	-10 €	HB-betoni
Recyclable material (t)	30,0	Own estimate
Recycling costs (€/t)	-30 €	Own estimate
Landfill material (t)	43,6	Own estimate
Landfill costs (€/t)	-170 €	Kiertokapula
Resale price of steel (€/t)	125 €	Dunant et al.

Table 8. Parameters for the reuse option

Scenario B reuse		Source
Steel structure deconstruction costs (€/sqm)	-9 €	Ruukki Construction
Roof structure deconstruction costs (€/sqm)	-7 €	Ruukki Construction
Roof insulation and membrane deconstruction costs (€/sqm)	-12 €	Ruukki Construction
Skin deconstruction costs (€/sqm)	-15 €	Ruukki Construction
Other deconstruction costs (€/sqm)	-119 €	Boost Brothers
Transportations	6	Own estimate
Transportation distance (km)	100	Own estimate
Transportation cost (€/km)	-10 €	HB-betoni
Storage space (sqm)	200	Own estimate
Storage time (mth)	9	Own estimate
Storage costs (€/sqm/mth)	-4,5 €	Newsec, Catella, Cushman & Wakefield
Steel structure recondition costs (€/sqm)	-4 €	Ruukki Construction
Sandwich panels recondition costs (€/wall sqm)	-6 €	Ruukki Construction
Roof structure recondition costs (€/sqm)	-3 €	Ruukki Construction
Testing costs (€/sqm)	-2,3 €	Ruukki Construction
Recyclable material (t)	30	Own estimate
Recycling costs (€/t)	-30	Own estimate
Landfill material (t)	30	Own estimate
Landfill costs (€/t)	-170	Kiertokapula
Resale price of steel structure (€/sqm)	67 €	Ruukki Construction
Resale price of roof structure (€/sqm)	21 €	Ruukki Construction
Resale price of sandwich panels (€/wall sqm)	55 €	Ruukki Construction
Steel structure depreciation rate, 10-year (%)	10%	Own estimate
Roof structure depreciation rate, 10-year (%)	15%	Own estimate
Sandwich panels depreciation rate, 10-year (%)	20%	Own estimate

The logic behind calculating the residual value was to calculate the costs and profits with the current figures as presented above, using the inflation rate of 2% to calculate the terminal value of these figures and then discounting these values to the present with the discount rate. In case of reusable components (steel structure, roof structure and sandwich panels) before the discounting, the terminal values were amended by the depreciation rate to estimate their potential selling price. Discount rate was 9% (2% inflation rate + 7% yield). In the table 9 is presented the residual value calculations for the traditional building with recycle option (Scenario A) and in the table 10 is presented the residual value calculations for the DfD building with reuse option (Scenario B).

Table 9. Residual value calculations for recycle option for Scenario A (traditional)

Scenario A (recycle)				
Residual value 2				
		10-year	20-year	30-year
Demolition costs (€)	-186 318 €	-227 121 €	-276 859 €	-337 490 €
Transportation costs (€)	-4 000 €	-4 876 €	-5 944 €	-7 245 €
Waste disposal costs (€)	-8 312 €	-10 132 €	-12 351 €	-15 056 €
Total costs (€)	-198 630 €	-242 129 €	-295 154 €	-359 791 €
Materials resale price (€)	8 999 €	10 970 €	13 372 €	16 300 €
Residual value (€)	-189 631 €	-231 160 €	-281 782 €	-343 491 €
Present value of RV (€)		-97 644 €	-50 279 €	-25 889 €

Table 10. Residual value calculations for reuse option for Scenario B (DfD)

Scenario B (reuse)				
Residual value 1				
		10-year	20-year	30-year
Deconstruction costs (€)	-209 418 €	-255 279 €	-311 184 €	-379 332 €
Transportation costs (€)	-6 000 €	-7 314 €	-8 916 €	-10 868 €
Storage costs (€)	-8 100 €	-9 874 €	-12 036 €	-14 672 €
Preparing for reuse costs (€)	-19 714 €	-24 031 €	-29 294 €	-35 710 €
Waste disposal costs (€)	-6 000 €	-7 314 €	-8 916 €	-10 868 €
Total costs (€)	-249 232 €	-303 813 €	-370 346 €	-451 450 €
Present value of costs (€)		-128 334 €	-66 081 €	-34 026 €
Resale price of steel structure (€)	86 698 €	105 684 €	128 829 €	157 041 €
Resale price of roof structure (€)	27 174 €	33 125 €	40 379 €	49 222 €
Resale price of sandwich panels (€)	70 400 €	85 817 €	104 611 €	127 520 €
Resale prices after depreciation				
Resale price of steel structure (€)		95 116 €	103 063 €	109 929 €
Resale price of roof structure (€)		28 156 €	28 265 €	27 072 €
Resale price of sandwich panels (€)		68 654 €	62 766 €	51 008 €
Present value of steel structure (€)		40 178 €	18 390 €	8 285 €
Present value of roof structure (€)		11 893 €	5 043 €	2 040 €
Present value of sandwich panels (€)		29 000 €	11 199 €	3 845 €
Present value of components (€)		81 072 €	34 632 €	14 170 €
Residual value (€)		-111 887 €	-176 251 €	-263 441 €
Present value of RV (€)		-47 262 €	-31 449 €	-19 856 €

10-year review

In the 10-year review with the aforementioned base parameters, the present value of residual value was negative for both cases although reuse option produced less loss. The calculated figures only take into account the costs and profits related to the demolition/deconstruction. In the traditional building with recycle case the present value of the residual value was ca. -€98K and in the DfD building with reuse case ca. -€47K. But when taking into account the extra investment of ca. €61K needed for the DfD building, with these figures it would be more reasonable to choose the traditional building with the recycle option than the DfD building with reuse option. However, there is only ca. €10K in favour for the traditional building with recycle option. The total feasibility (NPV) was clearly negative in the 10-year review. The residual value and NPV difference are presented in the table 11 below.

Table 11. Residual value and NPV comparison (traditional with recycle vs. DfD with reuse)

		10-year	20-year	30-year
Scenario A PV of residual value (recycle)		-97 644 €	-50 279 €	-25 889 €
Scenario B PV of residual value (incl. extra investment)		-108 132 €	-92 318 €	-80 726 €
Residual value comparison		-10 488 €	-42 040 €	-54 836 €
Scenario A NPV (recycle)		-584 248 €	-228 815 €	-45 797 €
Scenario B NPV (reuse)		-594 736 €	-270 855 €	-100 633 €
NPV comparison		-10 488 €	-42 040 €	-54 836 €

But as said before there is lot of uncertainty related to the demolition/deconstruction costs as well as for the resale price of the components so different figures in these parameters and thus different outcomes are possible. There is also uncertainty related to the amount of the extra investment in the beginning. In the table 12 below are presented the break-even points for the DfD building with reuse option (Scenario B) against the traditional building with recycle option (Scenario A) when comparing the discounted residual values.

Table 12. Break-even points for the DfD with reuse (10-year)

Break-even analysis (10-year)	Base	Break-even	Change (%)
Scenario B Other deconstruction costs (€/sqm)	-119 €	-103 €	-13 %
Scenario B Construction costs (€/sqm)	-885 €	-877 €	-1 %
Scenario A Other demolition costs (€/sqm)	-114 €	-130 €	14 %
Present value of components (€)	81 072 €	91 559 €	13 %

For the DfD building with reuse to break-even, the construction should decrease from the 885€/sqm to 877€/sqm. This would mean that the original extra investment could be ca. €50K. It is likely that the initial construction costs of DfD building are higher when compared to traditional building because of the need of more materials and connections but it is uncertain how much more the other costs related to the construction should be. And as the construction costs occur in the beginning, their impact is amplified in the calculations. The impact of the construction costs is presented in the figure 5 below.

If the other deconstruction costs for the DfD building with reuse option would decrease ca. 13%, it would make the DfD with reuse more reasonable option. As the deconstruction costs may vary heavily this reduction could be possible to achieve. Also, if the other demolition costs for the traditional building with recycle option would increase ca. 14%, the DfD building with reuse would become more reasonable option. The impact of these parameters to the residual value difference is presented below in the table 13. Values with red background indicate when the traditional building

with recycle is better option and values with green background when the DfD building with reuse is better option.

The discounted profits from the sale of the components should be ca. 13% higher for the DfD with reuse to break-even. To achieve this with the 9% discount rate, it would mean that there could be ca. 3% depreciation before discounting for all the reusable components instead of the original 10-20%. The impact of the changes in the depreciation rates for the steel structure and sandwich panels is presented in the table 14 below.

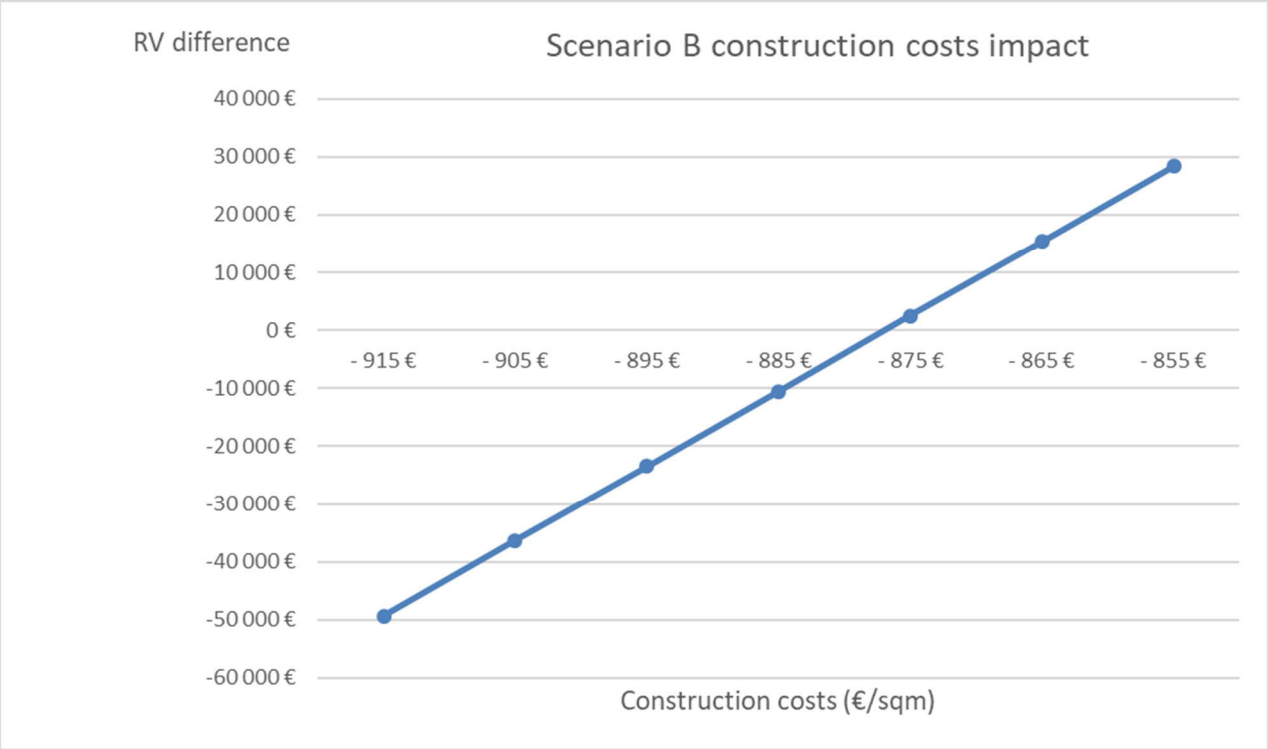

Figure 5. Impact of the Scenario B construction costs on the RV difference

Table 13. Sensitivity analysis of the Scenario A other demolition costs and Scenario B other deconstruction costs

	Scenario A Other demolition costs (€/sqm)							
	-10 488 €	-84 €	-94 €	-104 €	-114 €	-124 €	-134 €	-144 €
Scenario B Other deconstruction costs (€/sqm)	-149 €	-50 466 €	-43 803 €	-37 140 €	-30 477 €	-23 814 €	-17 151 €	-10 488 €
	-139 €	-43 803 €	-37 140 €	-30 477 €	-23 814 €	-17 151 €	-10 488 €	-3 825 €
	-129 €	-37 140 €	-30 477 €	-23 814 €	-17 151 €	-10 488 €	-3 825 €	2 838 €
	-119 €	-30 477 €	-23 814 €	-17 151 €	-10 488 €	-3 825 €	2 838 €	9 501 €
	-109 €	-23 814 €	-17 151 €	-10 488 €	-3 825 €	2 838 €	9 501 €	16 164 €
	-99 €	-17 151 €	-10 488 €	-3 825 €	2 838 €	9 501 €	16 164 €	22 828 €
	-89 €	-10 488 €	-3 825 €	2 838 €	9 501 €	16 164 €	22 828 €	29 491 €

Table 14. Sensitivity analysis of the Scenario B depreciation rates for the steel structure and sandwich panels

		Scenario B steel structure depreciation rate, 10-year %						
	-10 488 €	17,5 %	15,0 %	12,5 %	10,0 %	7,5 %	5,0 %	2,5 %
Scenario B sandwich panels depreciation rate, 10-year %	35 %	-19 273 €	-18 157 €	-17 041 €	-15 925 €	-14 809 €	-13 693 €	-12 577 €
	30 %	-17 461 €	-16 345 €	-15 229 €	-14 113 €	-12 997 €	-11 880 €	-10 764 €
	25 %	-15 648 €	-14 532 €	-13 416 €	-12 300 €	-11 184 €	-10 068 €	-8 952 €
	20 %	-13 836 €	-12 720 €	-11 604 €	-10 488 €	-9 372 €	-8 255 €	-7 139 €
	15 %	-12 023 €	-10 907 €	-9 791 €	-8 675 €	-7 559 €	-6 443 €	-5 327 €
	10 %	-10 211 €	-9 095 €	-7 979 €	-6 863 €	-5 747 €	-4 630 €	-3 514 €
	5 %	-8 398 €	-7 282 €	-6 166 €	-5 050 €	-3 934 €	-2 818 €	-1 702 €

20-year review and 30-year review

In the 20-year review the present value of residual value difference increases from the ca. €10K to ca. €42K which demonstrates the importance of the extra investment in the beginning, as the possible benefits of DfD and reuse are weakened by the time factor. In the 30-year review the difference is ca. €55K in favour for the traditional building with recycle.

In the 20-year time period the NPV's calculated were still clearly negatives but in the 30-year review the traditional building with recycle the NPV is ca. -€46K negative and the DfD building with reuse ca. -€100K. The payback time when using the discounted profits for the traditional building with recycle was ca. 34 years and ca. 40 years for the DfD building with reuse.

As can be seen from the table 15 below, the break-even points when comparing the present values of residual values become quite extreme except for the Scenario B construction costs in the 20-year review. For example, discounted profits from selling the components should be more than doubled from the base figures. Achieving this is quite questionable as for example, after 30 years value of the sandwich panels is likely to be near zero.

Scenario A other demolition costs should be ca. 107% higher from the current estimate of 114€/sqm in the 20-year review. On the other hand, it is very challenging to forecast the possible parameters for the future so the variation may be quite wide. In the table 16 below is demonstrated the possible variations of Scenario B construction costs and Scenario A other demolition costs. But clearly as the benefits of reuse happens far in the future, their value today is marginal. If the time factor would be ignored the benefits of DfD and reuse would be clear in the building's end-of-life decisions.

Table 15. Break-even analysis (20-year)

Break-even analysis (20-year)	Base	Break-even	Change (%)
Scenario B Construction costs (€/sqm)	-885 €	-853 €	-4 %
Scenario A Other demolition costs (€/sqm)	-114 €	-237 €	107 %
Present value of components (€)	34 632 €	76 672 €	121 %

Table 16. Sensitivity analysis of the Scenario A other demolition costs and Scenario B construction costs

	Scenario A Other demolition costs (€/sqm)							
	-42 040 €	-54 €	-74 €	-94 €	-114 €	-134 €	-154 €	-174 €
Scenario B construction costs (€/sqm)	-915 €	-101 445 €	-94 583 €	-87 722 €	-80 860 €	-73 998 €	-67 136 €	-60 274 €
	-905 €	-88 505 €	-81 643 €	-74 782 €	-67 920 €	-61 058 €	-54 196 €	-47 334 €
	-895 €	-75 565 €	-68 703 €	-61 842 €	-54 980 €	-48 118 €	-41 256 €	-34 394 €
	-885 €	-62 625 €	-55 763 €	-48 902 €	-42 040 €	-35 178 €	-28 316 €	-21 454 €
	-875 €	-49 685 €	-42 823 €	-35 962 €	-29 100 €	-22 238 €	-15 376 €	-8 514 €
	-865 €	-36 745 €	-29 883 €	-23 022 €	-16 160 €	-9 298 €	-2 436 €	4 426 €
	-855 €	-23 805 €	-16 943 €	-10 082 €	-3 220 €	3 642 €	10 504 €	17 366 €

Additional calculation

The calculation was also performed for the situation where the building is not designed for deconstruction but its parts (steel structure, roof structure and sandwich panels) are reused. The comparison was done between the reuse and recycle option for the traditional building. It can be speculated that the future tightening legislation may impose that some parts of the building must be deconstructed in a way that enables their reuse.

When compared to the DfD with reuse option, it was estimated that the deconstruction costs for the reusable parts were 25% higher and preparing for reuse costs were estimated to be ca. €12K higher. Other parameters were assumed to be the same. These assumptions were quite moderate, and it is possible that deconstruction and preparing for reuse costs could be much higher. However, with these assumptions it would make sense to deconstruct rather than demolish the building in the end of its life cycle even though it has not been designed for deconstruction. In the table 17 below can be seen the present value of residual value and NPV difference between the reuse and recycle in the traditional building.

Table 17. Residual value and NPV comparison (traditional with recycle vs. traditional with reuse)

		10-year	20-year	30-year
Scenario A PV of residual value (recycle)		-97 644 €	-50 279 €	-25 889 €
Scenario A PV of residual value (reuse)		-60 366 €	-38 196 €	-23 330 €
Residual value comparison		37 279 €	12 083 €	2 559 €
Scenario A NPV (recycle)		-584 248 €	-228 815 €	-45 797 €
Scenario A NPV (reuse)		-546 969 €	-216 732 €	-43 237 €
NPV comparison		37 279 €	12 083 €	2 559 €

Scenario 2 overall conclusions

The most important factors in the calculation that determine the meaningfulness of DfD and reuse were the deconstruction/demolition costs, initial construction costs and the resale price of the components in addition with the time value of money. It is quite certain that there has to be some premium in the initial construction costs when the building is designed for deconstruction at least at this point in time. This premium might be justified if it is known that the building will be relocated in the first 1-10 years.

The uncertainty related to the demolition/deconstruction costs weakens the validity of these calculations. From the literature it is pretty sure that there is a price premium for deconstructing instead of demolition, but it is questionable how much this premium would be in this case. Forking the demolition/deconstruction costs proved to be cumbersome and it can be assumed that there is quite much variation.

As the markets for the reclaimed building parts in Finland is in its infancy, estimating the potential resale prices was also difficult task. It is safe to think, that there is some discount in the reclaimed building parts when compared to new ones but estimating that amount is challenging.

From the investor's point of view one problem in the DfD and reuse within the DCF method is that the costs occur in the beginning, amplifying their importance and the profits occur possibly far in the future weakening their importance. For example, if it is thought that the building will stay in its use 30-40 years, the discounted profit from selling the components is almost totally eaten by the time value of money even though in nominal figures it would make more sense.

Even though in this case with the base figures the traditional building with recycle (Scenario A) was economically better option than the DfD with reuse (Scenario B), in 10-year review there would not have to be big changes in the most important parameters, for the DfD building with reuse to become a better option. Nonetheless, vice versa changes favouring the current practice of not DfD and recycle may also be possible. When the time period is prolonged, showing the benefits of DfD and reuse becomes economically difficult when using the DCF method. The 10-year time period also stood up in the interviews: if the building is going to be in its place more than 10 years, using the DfD principles is questionable (Vartiainen and Huhtala, 2019). The easier deconstruction and profits from the sale of the components may not be good enough incentives for the DfD principles to propagate at least in the longer time period and from the investor's perspective.

So, if the building is likely to stand in its place more than 10 years, benefits of DfD are hard to justify for the investor. If it would be compulsory by legislation to reuse (or at least enable reuse) instead of just recycling by for example, sanctions for not enabling reuse that might encourage investors, designers and builders to take disassembly into account in the design and construction phase of the building.

6.4 Leasing option calculations

In the leasing calculation aim was to find out that instead of buying the structures and skin in the beginning as with the other construction works, the investor would lease these parts for a certain time period (7 years in this example) after which the ownership would transfer to the investor. In

other words, the costs of structures and skin would transfer from the initial construction costs to the operating costs of the building which would mean lower initial costs for the investor.

To resolve the possible annual rent for the structures and skin certain boundary conditions were defined. As the initial costs of structures and skin was estimated to be circa €289K, the lessor of these parts would want at least this amount in the today's money. The required rate of return for the building part lessor was assumed to be the same as the discount rate which was 9 % in the base case. With these conditions the annual building part rent would have to be at least circa €54K with 7-year lease period. If the building part lessor would have a lower required rate of return, the annual rent could also be lower. The impact of the lower required rate of return of the building part lessor to the minimum annual building part rent can be seen from the figure 6 below. In case of lower annual building part rent, the investor should choose leasing of structure and skin instead of buying it in the beginning.

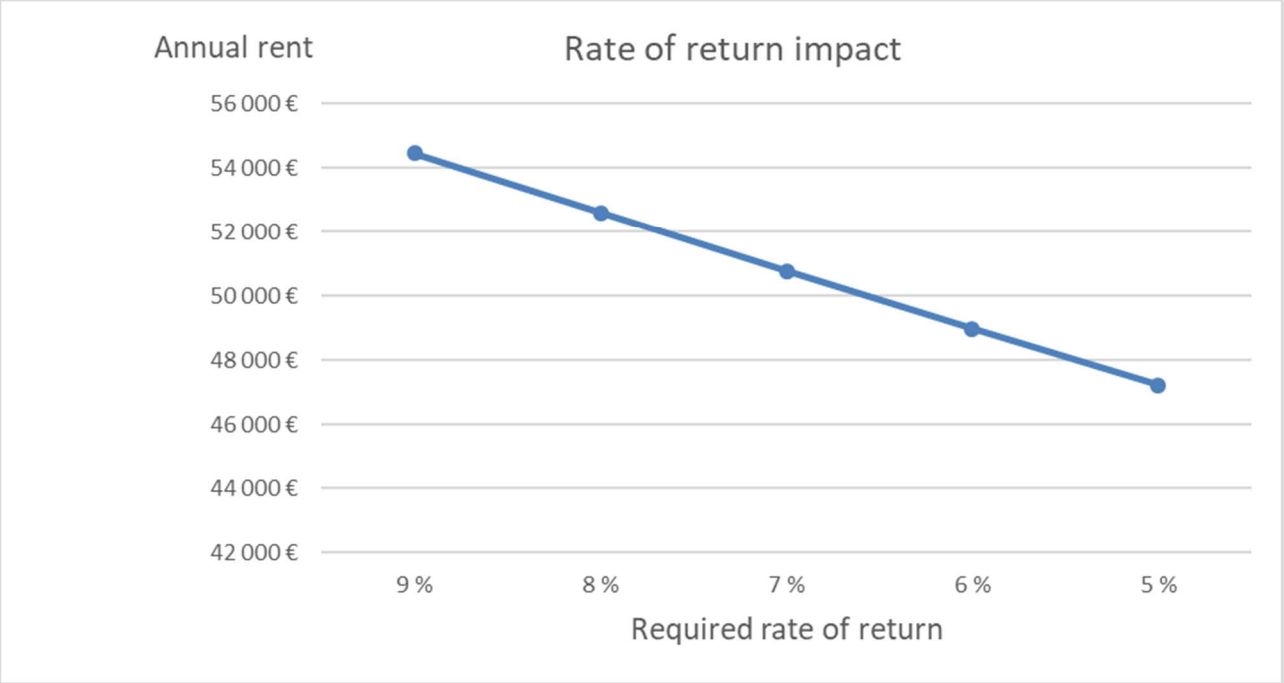

Figure 6. Impact of the required rate of return to the annual building part rent

If the yield required by the investor increases, then the possible annual building part rent could also be increased, which would be more beneficial to the building part lessor. If the yield increases but the building part rent would remain in the ca. €54K / y, then the leasing option would be better for the investor. The impact of the higher yield requirement can be seen from the figure 7 below.

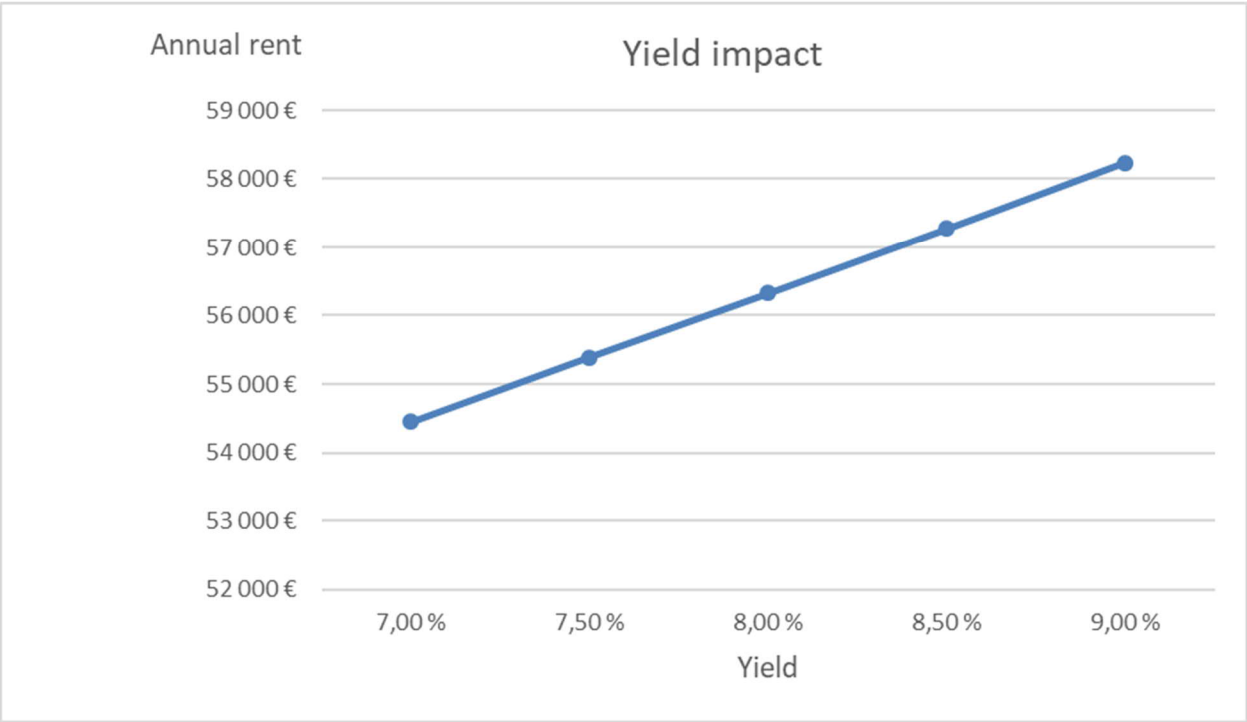

Figure 7. Yield impact to the annual building part rent

As found in the literature, leasing of the building parts is not a common practice and possibly this kind review may be too simplistic to execute in real life, but it gives the estimates for the potential leasing option.

7. Discussion and conclusions

Aim of this study was to resolve the feasibility of design for deconstruction and reuse in a case of commercial single-storey steel structure building. The feasibility study was carried out by doing a discounted cash flow analysis which compared the net present values as well as the discounted of residual values between a building designed for deconstruction and building not designed for deconstruction. In this chapter the results from the literature and empiric part are evaluated, reliability of the study is examined and recommendations for the further research are given.

7.1 Research findings

7.1.1 Literature

From the literature was found many barriers for using the DfD principles and reuse. As the DfD is likely to increase the initial construction costs and the benefits of it happens possibly far in the future, this is not a compelling equation for the investors, especially if it is not known when the building is thought to be deconstructed. There should be incentives that would force the investors, designers and builders to take the deconstruction phase of the building into consideration already in the design phase of the building. Means for this could be provided by for example, tightening legislation. This would then alleviate the reuse possibilities of building components. Of course, different designed service lives for different building parts questions the reusability of short-term building parts but for example, for the building structure designed service life is usually very long (50 to 100 years) so these parts should be designed and built in ways that enable reuse of them.

Building parts that are desired to be reused, must fulfil the quality requirements that are set to those. This means that their CE-markings and Declaration of Performances must be valid. Testing of reclaimed building components should be cost-effective and, in some cases, testing could be bypassed if the quality of the component can be assured in other way. Also, the customers mindset needs to change from neglecting reclaimed building parts to accepting those.

7.1.2 Calculations

In the first calculation scenario was made an assumption, that the building will stay in its current use. The NPVs calculated were positive for both buildings: €148K for the traditional building and €88K for the DfD building. The initial difference of ca. €61K favouring the traditional building against the DfD building came from the higher initial construction costs for the DfD building.

After this basic calculus a sensitivity review and break-even analysis were performed. Then by changing the some of the parameters (yield, market rent, operating costs, construction costs), where the DfD principles can be thought to have an effect, aim was to discover positions where the DfD building (Scenario 2) would be a better option against the traditional building (Scenario 1).

Break-even points for the DfD building were yield of 6,67%, market rent of 8,28 €/sqm/mth and operating costs of 1,73 €/sqm/mth. The base level for these parameters were yield of 7,00%, market rent of 8,00 €/sqm/mth and operating costs of 2,00 €/sqm/mth. When changing two parameters simultaneously, for example yield of 6,90% and market rent of 8,20 €/sqm/mth would make the DfD building more profitable.

Studies have shown that for example, environmental certificates have a positive effect on the value of the building when compared to a building without a certificate and same kind of train of thought was used in this case. However, as the DfD does not yet have the same established “image premium” as the environmental certificates have, for example, remarkably lower yield requirements may be hard to justify for the investor. As the most tangible asset of the DfD occurs in the deconstruction phase of the building, this asset is hard to quantify, if the building will stay in its use more than 10 years.

In the second calculation it was assumed, that after certain time period (10, 20, 30 years) the building will either be demolished in case of the traditional building or deconstructed in case of DfD building. The calculation compared the discounted residual values of demolition (where most of the steel is recycled) and deconstruction (where most of the steel is reused). In the deconstruction option also the initial construction cost premium of ca. €61K was taken into account when performing the comparison. This can be thought as an extra investment for the DfD building which enables the reuse.

The discounted residual values calculated were negative for both buildings in every time period. In the 10-year review with the base parameters, the discounted residual value when including the extra investment was ca. -€108K for the DfD building and ca. -€98K for the traditional building. So, with the base parameters the difference favouring the traditional building was ca. €10K in 10-year review but there was lot of uncertainty related to the biggest cost items (deconstruction/demolition costs, construction costs, resale price of the components).

For the DfD building with reuse (Scenario B) to break-even against the traditional building with recycle (Scenario A) when comparing the discounted residual values in 10-year review, for example the present value of components should be ca. 13% higher than in the base case meaning their value should increase from the ca. €81K to ca. €92K. The construction cost premium should decrease from the ca. €61K to €50K for the Scenario B to become economically better option. If the other deconstruction costs for the Scenario B would decrease more than ca. 13% from the base figure of 119€/sqm to 103€/sqm, this would make the Scenario B a better option. As there was lot of uncertainty related to these cost items, these kind of changes favouring the DfD building with reuse could be plausible. On the other hand, changes to the other direction may also be possible.

When the time period is prolonged, this favours the traditional building with recycle option, as the benefits of reuse are weakened by the time and the effect of the initial construction cost premium becomes stronger. In the 20-year review the difference favouring the traditional building with recycle option when comparing the discounted residual values was ca. €42K. For example, for the DfD building with reuse to break-even in the 20-year review when comparing the discounted residual values, the present value of the components should be ca. €77K whereas in the base case their value was calculated to be ca. €35K.

7.1.3 Overall

With current practices it is hard to believe that DfD and reuse would spread wide across the construction industry in Finland purely by markets, when the building is thought stay in its place more than 10 years. The results from the DCF calculations support the view that when the possible benefits of DfD and reuse happen far in future this is not attractive for the investors. And as the costs of DfD

incur in the beginning there is a clear imbalance of the profits and costs from the investor's point of view. This means that currently it is not profitable to choose DfD building over the traditional building at least when the time period is at least 10 years.

The two examples here with using the DfD principles (Hakaniemi's temporary market hall and shopping center Pikkulaiva) show that DfD and reuse are utilised if the building is known to be transferred in 2-5 years after its completion. If the time span of the building is thought to be longer, using the DfD principles becomes more questionable from the economic point of view. The building parts that are reusable for example, after 30 years possibly include only the frame of the building. Overall it can be thought that the potential user group of DfD and reuse is at the moment user owners rather than investors.

7.2 Research quality and reliability

There has not been done much studies about the economic feasibility of DfD and reuse in a building level. Some studies have compared the feasibility of demolition versus deconstruction and feasibility of using reused steel elements when compared to new ones but in overall research has been limited. In this study the feasibility of DfD and reuse were both examined by relatively simple cash flow calculations from the investor's perspective.

The discounted cash flow method was utilised to perform the comparison between the traditional and DfD building. Because the method is prone for small changes (especially the yield-level) having big impact to the overall results, the results obtained here must be viewed carefully. Also, there is lot of uncertainty related to the figures for the biggest parameters, so the results may change radically by modifying these figures. For example, the extra investment needed for the DfD building was estimated independently because this kind of data was difficult to receive. Data related to the demolition/deconstruction costs were as well tricky to obtain. The examples founded here showed great variation in the costs and this variation can be rationalised by the building characteristics as well as the market conditions.

Because the market for the reclaimed building parts is almost non-existent in Finland, estimating the potential future sale prices for steel structure, roof structure and sandwich panels was too quite cumbersome. As the calculations were done for a specific type of building (single-storey steel structure building, used as a warehouse/industrial) located in Tampere, the results obtained here cannot be generalised. Despite these imperfections, the study gives some implications about the most important parameters affecting the feasibility. It also shows what parameters should be in force for the DfD building and reuse to be economically better option when compared to the traditional building and recycling.

7.3 Recommendations and further research

7.3.1 Recommendations

Reuse is not a new invention but currently it is underutilised in the construction industry. For reuse of some building parts (structure and with reservation skin) to become a plausible and attractive option in the end-of-life scenario of the building, changes are needed to the current practices. Stricter legislation regarding recycling/landfilling including some penalties, increasing taxes for the virgin raw

materials, providing economic incentives for DfD in the early phase of the building, improving market readiness of the reclaimed building parts, using more standardisation in the building parts are some recommendations for DfD and reuse to spread wider in the construction industry. Dismountable building in the future should be seen as a material stock instead of construction waste.

7.3.2 Further research

As mentioned earlier in this study, there is lot of uncertainty related to the demolition/deconstruction costs, DfD construction cost premium and resale price of the reused elements. A more detailed data about the deconstruction/demolition costs is needed to make more reliable calculations and to fork the difference between the deconstruction and demolition costs. Even though the construction costs can be estimated quite accurately, the construction cost premium of the DfD building could be examined more thoroughly.

As this study focused on the feasibility from investor's point of view it would be interesting to know how the feasibility or usability of DfD and reuse can be seen from the user-owner perspective. Also, different kind of valuation method such as real option analysis could be used to solve the feasibility of DfD and reuse.

As the image of the reclaimed building parts is currently negative, it would be interesting to find out, what should be done, in order for the customers to approve reclaimed building parts for their construction projects. In general, studies related to the reclaimed building parts market in Finland could also give more information and recommendations needed for wider adoption of reuse in the construction industry.

References

Accenture. 2014. Circular Advantage: Innovative Business Models and Technologies to Create Value in a World without Limits to Growth. [web report] Available: https://www.accenture.com/t20150523T053139__w__/us-en/_acnmedia/Accenture/Conversion-Assets/DotCom/Documents/Global/PDF/Strategy_6/Accenture-Circular-Advantage-Innovative-Business-Models-Technologies-Value-Growth.pdf [referred 25.10.2018]

Adams Katherine Tebbat, Osmani Mohamed, Thorpe Tony and Thornback Jane. 2017. Circular economy in construction: current awareness, challenges and enablers. Proceedings of the Institution of Civil Engineers: Waste and Resource Management. [PDF-file]

Akbarnezhad A., Ong K.C.G., Chandra L.R. 2013. Economic and environmental assessment of deconstruction strategies using building information modelling. Automation in Construction. [PDF-file]

Akinade Olugbenga O., Oyedele Lukumon O., Ajayi Saheed O., Bilal Muhammad, Alaka Hafiz A., Owolabi Hakeem A., Bello Sururah A., Jaiyeoba Babatunde E. and Kadiri Kabir O. 2016. Design for Deconstruction (DfD): Critical success factors for diverting end-of-life waste from landfills. Waste Management. [PDF-file]

Arup. 2016. The Circular Economy in the Built Environment. [web report] Available: https://www.arup.com/perspectives/publications/research/section/circular-economy-in-the-built-environment [referred 25.10.2018]

Bailey John. 1984. Real Estate Investment Analysis. Journal of Valuation Vol. 2 Issue: 4. [PDF-file]

Bank of Finland. 2019. Hintavakaus [web page]. Available: https://www.suomenpankki.fi/fi/rahapolitiikka/hintavakaus/ [referred 9.1.2019]

Bioregional, 2011. Reuse and recycling on the London 2012 Olympic Park. Lessons for demolition, construction and regeneration. Wallington: BioRegional Development Group. 41 p. Available: http://www.bioregional.com/wp-content/uploads/2015/05/Reuse-and-recycling-on-London-2012-olympic-park-Oct-2011.pdf [referred 18.07.2017].

Birat J.-P., Vizioz J.-P., de Lassat de Pressigny Y., Schneider M. & Jeanneu M., 1999. CO2 Emissions and the Steel Industry's available responses to the Greenhouse Effect. San Diego: IRSID. Available: http://www.ulcos.org/en/docs/Ref16%20-%20Sdiego.pdf [referred 27.06.2017].

BlueScope. 2017. Sustainability [web page]. Available: https://www.bluescope.com/sustainability/reports/ [referred 10.10.2018]

Bougrain Frédéric and Laurenceau Sylvain. 2017. Reuse of building components: an economic analysis. International HISER Conference on Advances in Recycling and Management of Construction and Demolition Waste [PDF-file]

Brand S., 1995. How Buildings Learn: What Happens After They're Built. London: Penguin Books. 252 p. 9781101562642.

Branz, 2017. Web resources. REBRI. Planning for waste management. Planning for Deconstruction. [verkkodokumentti] Porirua: BRANZ. Available: Densley Tingley D., 2012. Design for deconstruction: An Appraisal. Report submitted in partial fulfilment of the degree in Doctor of Philosophy. Sheffield: The University of Sheffield. Available: http://etheses.whiterose.ac.uk/3771/ [referred 29.06.2017].

https://www.branz.co.nz/cms_display.php?st=1&sn=106&pg=12649 [referred 15.12.2017].

Bäckgren Noona. 2018. Asuntomarkkinat ovat rikki: Uusien asuntojen ongelmista puhutaan jatkuvasti, mutta silti niille löytyy aina ostaja. Helsingin Sanomat. [web article]. Available: https://www.hs.fi/koti/art-2000005842890.html [referred 30.11.2018]

Catella. 2018. Markkinakatsaus, Suomi, Kevät 2018. [PDF-file]

Cherif Emma, Grant Delvin. 2013. Analysis of e-business models in real estate. Springer Science+Business Media New York. [PDF-file]

Chesbrough Henry, Rosenbloom Richard S. 2002. The role of the business model in capturing value from innovation: evidence from Xerox Corporation's technology spin-off companies. Industrial and Corporate Change. [PDF-file]

CircHubs. Uudelleenkäyttöön soveltuvat rakennusosat. [web page]. Available: https://circhubs.fi/tietopankki/uudelleenkayttoon-soveltuvat-rakennusosat/ [referred 10.10.2018]

Citycon. 2018. Pikkulaiva – Suomen ensimmäinen pop-up-kauppakeskus. [web page]. Available: https://www.citycon.com/fi/vastuullisuus/pikkulaiva-suomen-ensimmainen-pop-up-kauppakeskus [referred 3.12.2018]

Coelho André and de Brito Jorge. 2010. Economic analysis of conventional versus selective demolition – A case study. Journal of Resources, Conservation and Recycling. [PDF-file]

Collan Mikael, Fullér Robert and Mezei József. 2009. A Fuzzy Pay-Off Method for Real Option Valuation. Journal of Applied Mathematics and Decision Sciences. [PDF-file]

Construction Products Association. 2016. Knowledge Resource for Circular Economy Thinking in Construction. [web document]. Available: https://www.constructionproducts.org.uk/media/177748/gcb-circular-economy-april-2016-v3.pdf [referred 18.10.2016]

Crowther P., 2001. Developing an inclusive model for design for deconstruction [verkkodokumentti]. CIB Publication 266. Florida: University of Florida. 25 p. Available: http://eprints.qut.edu.au/2884/1/Crowther-TG39-2001.PDF [referred 29.06.2017].

Cushman & Wakefield. 2018. Finland, Industrial Market Snapshot, Third Quarter | 2018. [PDF-file]

Da Graça Carvalho M., Bonifacio M. & Deschamps P., 2011. Building a low carbon society. Energy 36, p. 1842-1847.

Dantata Nasiru, Touran Ali and Wang James. 2005. An analysis of cost and duration for deconstruction and demolition of residential buildings in Massachusetts. [web document]. Available: https://www.sciencedirect.com/science/article/pii/S092134490400148X [referred 5.10.2018]

Da Rocha Cecilia Gravina and Satler Miguel Aloysio. 2009. A discussion on the reuse of building components in Brazil: An analysis of major social, economical and legal factors. Resources, Conservation and Recycling. [PDF-file]

Deloitte. 2017. Study on Resource Efficient Use of Mixed Wastes, Improving management of construction and demolition waste – Final Report. Prepared for the European Commission, DG ENV. [web report]. Available: http://ec.europa.eu/environment/waste/studies/pdf/CDW_Final_Report.pdf [referred 10.10.18]

Densley Tingley D., Cooper S. & Cullen J. 2017. Understanding and overcoming the barriers to structural steel reuse, a UK perspective. Journal of Cleaner Production 148, p. 642-652.

Ding G.K.C., 2007. Sustainable construction – The role of environmental assessment tools. Journal of Environmental Management 86, p. 451-464.

Directive 2008/98/EC of the European Parliament and of the Council of 19 November 2008 on waste and repealing certain Directives

Edmonds J., Straka V. & Gorgolewski M., Unknown date. Facilitating greater reuse and recycling of structural steel in the construction and demolition process. Reuse-Steel Case Study 1. University of Toronto Scarborough Campus Student Centre, Toronto, Ontario. Toronto: Department of Architectural Science at Ryerson University. 4 p. Available: http://www.reuse-steel.org/files/projects/USTC/UTSC%20case%20study%205-5.pdf [referred 19.07.2017].

Edmonds J. & Straka V. Unknown date. Facilitating greater reuse and recycling of structural steel in the construction and demolition process. Reuse-Steel Case Study 8. Roy Stibbs Elementary School. Toronto: Department of Architectural Science at Ryerson University. 3 p. Available: http://www.reuse-steel.org/files/projects/Roy%20Stibbs/Roy%20Stibbs%20case%20study%205-5.pdf [referred 19.07.2017].

Ellen MacArthur Foundation. 2015. Towards a circular economy: business rationale for accelerated transition. [web document]. Available: https://www.ellenmacarthurfoundation.org/assets/downloads/TCE_Ellen-MacArthur-Foundation_26-Nov-2015.pdf [referred 16.10.2018]

Ellen MacArthur Foundation, 2017. Circular economy. Circular economy overview. [verkkodokumentti]. Ellen MacArthur Foundation. Available: https://www.ellenmacarthurfoundation.org/circular-economy/overview/concept [referred 10.11.2017].

Ellen MacArthur Foundation. 2017. Infographic. [web page]. Available: https://www.ellenmacarthurfoundation.org/circular-economy/infographic [referred 16.10.2018]

European Commission. 2011. Service contract on management of construction and demolition waste – SR1. Final Report Task 2. Bio Intelligence service [PDF-file]

Fisher Jeffrey D., Louziotis Jr Demetrios. 2013 Real Estate Appraisal and Valuation. [PDF-file]

French Nick and Gabrielli Laura. 2005. Discounted cash flow: accounting for uncertainty. Journal of Property Investment & Finance. [PDF-file]

Fuerst Franz and McAllister Patrick. 2010. Green Noise or Green Value? Measuring the Effects of Environmental Certification on Office Values. American Real Estate and Urban Economics Association [PDF-file]

Gorgolewski Mark, Straka Vera, Edmonds Jordan and Carmela Sergio. 2006 Facilitating Greater Reuse and Recycling of Structural Steel in the Construction and Demolition Process, Final Report. Ryerson University, Department of Architectural Science, Faculty of Engineering and Applied Science [PDF-file]

Gorgolewski M., 2006. The implications of reuse and recycling for the design of steel buildings. Canadian Journal of Civil Engineering 33(4), p. 489-496.

Gorgolewski M., 2008. Designing with reused building components: some challenges. Building Research & Information 36(2), p. 175-188.

Gu P. & Sosale S., 1999. Product modularization for life cycle engineering. Robotics and Computer Integrated Manufacturing 15 (1999), p. 387-401.

Guy Bradley, Shell Scott, Esherick Homsey. 2006. Design for Deconstruction and Materials Reuse [web document]. Available: http://citeseerx.ist.psu.edu/viewdoc/download?doi=10.1.1.624.9494&rep=rep1&type=pdf [referred 29.10.2018]

Guy B. & Ciarimboli N., 2008. Design for Disassembly in the built environment: a guide to closed-loop design and building. Pennsylvania: Hamer Center. 132 p.

Haahtela Yrjänä and Kiiras Juhani. 2013. Talonrakennuksen kustannustieto. Haahtela-kehitys Oy. p. 384+6

Haapio J., 2012. Feature-Based Costing Method for Skeletal Steel Structures based on the Process Approach. Tampere: Tampereen teknillinen yliopisto. 98 p.

HB-betoni. 2017. Kuljetushinnasto 1.1.2017. [web page] Available: http://www.hb.fi/media/kuvat/esitteet/kuljetus-ja-toimitusehdot2017.pdf [referred 11.1.2019]

Hekkanen Martti. 2005. JUKO – Ohjeistokansio julkisivukorjaushankkeen läpiviemiseksi, Rakennuksen ylläpitö, Kiinteistönpitostrategiat. [web document] Available: http://www.julkisivuyhdistys.fi/julkkari2/juko/JUKO_pdf_web/Korjaushanke/A_rakennuksen_ylla pito/A1%20Kiinteistonpitostategiat.pdf [referred 30.11.2018]

Hirigoyen Julie. 2016. Why real estate needs to wake up to the circular economy. [web page] JLL Real Views. Available: https://www.jllrealviews.com/trends/sustainability/why-real-estate-needs-to-wake-up-to-the-circular-economy/ [referred 14.11.2018]

Hradil Petr. 2014. Barriers and opportunities of structural elements reuse. [web document]. VTT-R-01364-14. Available: https://www.vtt.fi/inf/julkaisut/muut/2014/VTT-R-01363-14.pdf [referred 2.10.2018]

Hradil P., Fülöp L. and Ungureanu V. Assessment of reusability of components from single-storey steel buildings. [PDF-file]

Hradil Petr, Talja Asko, Wahlström Margareta, Huuhka Satu, Lahdensivu Jukka and Jussa Pikkuvirta. 2014. Reuse of structural elements. Environmentally efficient recovery of building components. [web document]. VTT Technology 200. Available: https://www.vtt.fi/inf/pdf/technology/2014/T200.pdf [referred 18.9.2018].

Huuhka Satu. 2008. Kierrätys arkkitehtuurissa, Betonielementtien ja muiden rakennusosien uudelleenkäyttö uudisrakentamisessa ja lähiöiden energiatehokkaassa korjaus- ja täydennysrakentamisessa. [web document]. Available: https://dspace.cc.tut.fi/dpub/bitstream/handle/123456789/6547/huuhka.pdf?sequence=6&isAllowed=y [referred 9.2.2019]

Huuhka S. and Hakanen J.H. 2015. Potential and barriers for reusing load-bearing building components in Finland. Int. Journal for Housing Science, Vol.39, No.4 pp. 215-224. [PDF-file]

Huuhka, S., & Lahdensivu, J. 2016. A statistical and geographical study on demolished buildings. Building Research and Information, 44(1), p. 73-96.

Häkkinen T., Huovila P., Tattari K., Seppälä J., Pylkkö T. & Leivonen J., 1999. Rakentamisen ja rakennusten ekotehokkuus. VTT Rakennustekniikka ja Suomen ympäristökeskus. 48 p. Available: http://cic.vtt.fi/eco/esitutk-loppurap11-11-99.pdf [referred 28.06.2017].

Hämeen ammattikorkeakoulu, 2008. Teräsrakentaminen. Suomennettu alkuperäisteoksesta Stålbyggnad. Hämeenlinna: Hämeen ammattikorkeakoulu. 242 p. 978-951-784-457-1.

Isojoen Konehalli Oy, 2017. Varastointi ja kiinnitys. Pultit mutterit ja aluslaatat. [verkkodokumentti]. Kauhajoki: Isojoen Konehalli Oy. Available: https://www.ikh.fi/fi/kiinnitystarvikkeet--heloitus/pultit--mutterit-ja-aluslaatat [referred 14.12.2017].

Jaillon Lara, Poon C.S. 2013. Life cycle design and prefabrication in buildings: A review and case studies in Hong Kong. Automation in Construction. [PDF-file]

Johnson Mark W. Christensen Clayton M. and Kagermann Henning. Reinventing Your Business Model. 2008. [web page]. Harvard Business Review December 2008 Issue. Available: https://hbr.org/2008/12/reinventing-your-business-model [referred 13.11.2018]

Jokela V., 2016. Teräsliitosten mitoitus ja kustannusvertailu. Tampere: Tampereen teknillinen yliopisto. 99 p.

Kekki, Kaisa. Purkujätteen tehokas hyötykäyttö – case Leppävaaran Maxi-market. [web article]. Available: https://www.rakennustieto.fi/Downloads/RK/RK060404.pdf [referred 3.12.2018]

Keller Maura. 2016. Recycling: A crucial component of LEED construction practices. [news article]. Available: http://www.allenhoshall.com/wp-content/uploads/2016/04/arn-recycling-4-1-16.pdf [referred 6.2.2019]

Kesti J., 2017. Technology director, Ruukki Construction Oy. E-mail message 19.12.2017. Receiver: J. Seppälä. Hattuorren hinta.

Kiertokapula. 2019. Hinnasto. [web page]. Available: https://www.kiertokapula.fi/palvelut/jatteiden-vastaanotto/hinnasto/ [referred 12.2.2019]

Kokko J., 2015. Kustannusten mallintaminen eristettyjen putkien suunnittelussa. Nastola: Lappeenrannan teknillinen yliopisto. 85 p.

Korhonen Esko and Rontu Kirsi. 2013. Elinkaarihankkeen palvelusopimusmalli. Kuntaliiton verkkojulkaisu. Suomen Kuntaliitto. [PDF-file]

Kotilainen S., 2013. Moduulirakentaminen. Ratkaisumalleja tulevaisuuden asuntorakentamisen haasteisiin. Tampere: Tampereen teknillinen yliopisto. 210 p. 978-952-15-3010-4.

Krumm Peter J.M.M. and de Vries Jackie. 2003. Value creation through the management of corporate real estate. Journan of Property Investment & Finance. [PDF-file]

KTI. 2010 Kiinteistöliiketoiminnan arvoverkostot, ansaintalogiikat ja päätöksentekoprosessit – kestävän kehityksen ratkaisujen käyttöönoton haasteet ja esteet. [web document] Available: https://kirafoorumi.fi/wp-content/uploads/2018/01/KTI_Tekes_Arvoverkostoselvitys_2010.pdf [referred 15.11.2018]

KTI. 2018. The Finnish Property Market | 2018. [PDF-file]

Kuhnhenne Markus, Hradil Petr, Sansom Michael, Kesti Jyrki and Dubina Dan. 2018. Report on the reuse potential of single-storey steel buildings. PROGRESS 2017-2020. [PDF-file]

Lapin Metallikierrätys Oy, 2017. Tuotteet. Rautalevy. [verkkodokumentti] Rovaniemi: Lapin Metallikierrätys Oy. Available: http://www.lapinmetallikierratys.fi/tuotteet/rautalevy [referred 14.12.2017].

Leino T., Häkkä-Rönnholm E., Nieminen J., Koukkari H., Hieta J. & Vesikari E., 1998. Teräsrakenteiden käyttöikäsuunnittelu. Espoo: Valtion teknillinen tutkimuskeskus (VTT). 130 p. 951-38-5409-4.

Lukka Kari. 2001. Konstruktiivinen tutkimusote. [web page]. Available: https://metodix.fi/2014/05/19/lukka-konstruktiivinen-tutkimusote/ [referred 11.12.2018]

Maankäyttö- ja rakennuslaki 132/1999

Malkki Mika. Project leader. City of Helsinki, Urban Environment Division. 2019. Interview conducted 10.1.2019. Interviewer: Olli-Pekka Pajala

Meinander Malin (ed.), Mroueh Ulla-Maija (ed.), Bacher John, Laine-Ylijoki Jutta, Wahlström Margareta, Jermakka Johannes, Teirasvuo Nina, Kuosa Hannele, Törn Maria, Laaksonen Johanna, Heiskanen Jukka, Kaila Juha, Vanhanen Hanna, Dahlbo Helena, Saramäki Kaarina, Jouttijärvi Timo, Mattila Tuomas, Retkin Risto, Suoheimo Pirke, Lähtinen Katja, Sironen Susanna, Sorvari Jaana, Myllymaa Tuuli, Havukainen Jouni, Horttanainen Mika and Luoranen

Metallinjalostajat ry, 2014. Teräskirja. 9. painos. Helsinki: Metallinjalostajat ry. 116 p. 978-952-238-121-7.

Mika. 2012. Direction of future developments in waste recycling. [web document]. VTT Technology 60. Available: https://www.vtt.fi/inf/pdf/technology/2012/T60.pdf [referred 10.10.2018]

Ministry of the Environment. 2013. Rakennusmateriaalien ympäristövaikutukset. Ympäristöministeriön raportteja 8 | 2013. [web document 9]. Available: http://julkaisut.valtioneuvosto.fi/bitstream/handle/10138/41423/YMra8_2013_Rakennusmateriaalien_ymparistovaikutukset_FINAL.pdf?sequence=2&isAllowed=y [referred 27.11.2018]

Ministry of the Environment. 2014. Rakentamisen materiaalitehokkuuden edistämisohjelma. Ympäristöministeriön raportteja 17 | 2014. [web document]. Available: http://julkaisut.valtioneuvosto.fi/bitstream/handle/10138/135172/YMra_17_%202014.pdf?sequence=1 [referred 22.11.2018]

Ministry of the Environment. 2018. Kiertotalous [web page]. Available: http://www.ym.fi/fi-FI/Ymparisto/Kiertotalous [referred 16.10.2018]

Morris Michael, Schindehutte Minet and Allen Jeffrey. 2003. The entrepreneur's business model: toward a unified perspective. Journal of Business Research. [PDF-file]

Mroueh Ulla-Maija. 2014. Rakennusosien ja materiaalien uudellenkäytön sääntelyyn liittyviä kysymyksiä. ReUSE seminar. VTT Technical Research Centre of Finland. [web report] Available: https://www.vtt.fi/files/sites/reuse/S3_4_Legislative_barriers_of_re_using.pdf [referred 22.11.2018]

Ness D., Swift J., Ranasinghe D. C., Xing Ke. & Soebarto V. (2015). Smart steel: new paradigms for the reuse of steel enabled by digital tracking and modelling. Journal of Cleaner Production 98, p. 292-303.

Newsec. 2018. Kiinteistömarkkinakatsaus Suomi, Syksy 2018. [PDF-file]

Ojanen Severi. 2016. The potential and limitations of re-using and recycling of construction products from the perspective of circular economy. [web document]. Available: https://aaltodoc.aalto.fi/bitstream/handle/123456789/22169/master_Ojanen_Severi_2016.pdf?sequence=1&isAllowed=y [referred 20.11.2018]

Ortiz O., Castells F. & Sonnemann G., 2008. Sustainability in the construction industry: A review of recent development based on LCA. Construction and Building materials 23, p. 28-39.

Pantsar M., 2017. Kiertotalous tuo ratkaisuja [verkkolehti]. Ympäristö-lehti 3/2017. Helsinki: Ympäristöministeriö ja Suomen ympäristökeskus. Available: http://www.ym.fi/fi-

FI/Ajankohtaista/Julkaisut/Ymparistolehti/2017/Kiertotalous_tuo_ratkaisuja(43463/ [referred 09.11.2017].

Pekuri Aki and Haapasalo Harri. 2012. Liiketoimintamallien hyödyntäminen rakennushankkeiden ja -liiketoiminnan suunnittelussa. Rakentajan kalenteri 2012 | Rakennustietosäätiö RTS, Rakennustieto Oy ja Rakennusmestarit ja insinöörit AMK RKL ry. [PDF-file]

Pekuri Ari, Pekuri Laura and Haapasalo Harri. 2013. The Role of Business Models in Finnish Construction Companies. Australasian Journal of Construction Economics and Building. [PDF-file]

Pellosniemi J., & Kalamies U., Unknown date. Teräsrakennetuotteet ja suositeltavat teräslajit [verkkodokumentti]. Helsinki: Teräsrakenneyhdistys. Available: https://www.rakennustieto.fi/Downloads/RK/RK010406.pdf. [referred 08.11.2017].

Ploeger H.D., Prins M., Straub A. and van den Brink R. 2017. Circular economy and real estate: alternatives for operational lease. International research conference 2017: Shaping tomorrow's built environment. Conference proceedings. [PDF-file]

Pongiglione M. & Calderini C., 2014. Material savings through structural steel reuse: A case study in Genoa. Resources, Conservation and Recycling 86, p. 87-92.

Preston Felix. 2012. A Global Redesign? Shaping the Circular Economy. Chatham House briefing paper. [PDF-file]

PROGRESS. 2017. Provisions for greater reuse of steel structures. Annex 1, Part B. [PDF-file]

PROGRESS 2018. Summary of design practices for reusable buildings and products. (DRAFT). [PDF-file]

Pun Sung Kin, Liu Chunlu, Langston Craig, Treloar Graham and Itoh Yoshito. 2006. Promoting the reuse and recycling of building demolition materials. World Transaction on Engineering and Technology Education. [PDF-file]

Rajakallio Karoliina, Ristimäki Miro, Andelin Mia and Junnila Seppo. 2016. Business model renewal in context of integrated solutions delivery: a network perspective. International Journal of Strategic Property Management. [PDF-file]

Rakennusteollisuus. 2019. Elinkaarimallit. [web page]. Available: https://www.rakennusteollisuus.fi/Rakennusteollisuus-RT/Elinkeinoasiat/Elinkaarimallit/ [referred 23.1.2019]

Rakennustieto. 2008. Kiinteistön tekniset käyttöiät ja kunnossapitojaksot, RT 18-10922. Rakennustietosäätiö RTS 2008. [web document]. Available: https://kortistot.rakennustieto.fi/resource/juha/content/3373#page=1 [referred 29.11.2018]

Rantajärvi L., 2014. Rakennusmateriaaleilla on väliä [verkkolehti]. Ympäristö-lehti 3/2013. Helsinki: Ympäristöministeriö ja Suomen ympäristökeskus. Available: http://www.syke.fi/fi-FI/Julkaisut/Ymparistolehti/2013/ [referred 27.06.2017].

Ratu 1221-S, 2009. Purkutöiden suunnittelu. Purkusuunnitelma ja purkutöiden tehtäväsuunnittelu. Helsinki: Rakennustieto Oy: 29 p.

Rautio Niko. 2014. ELINKAARIMALLIN TOTEUTUS RAKENTAMISESSA. Opinnäytetyö. Kymenlaakson Ammattikorkeakoulu, Rakennustekniikan koulutusohjelma / Rakennustuotanto. [PDF-file]

Regulation (EU) No 305/2011 of the European Parliament and of the Council of 9 March 2011 laying down harmonised conditions for the marketing of construction products and repealing Council Directive 89/106/EEC

Riihimäki Markku and Siekkinen Heidi. 2002. Asiakastarpeet kiinteistöliiketoiminnassa, Liike- ja toimistokiinteistöt. VTT Rakennus- ja yhdyskuntatekniikka, Liiketoiminnat ja prosessit. [PDF-file]

RIL 201-1-2008, 2008. Suunnitteluperusteet ja rakenteiden kuormat. Helsinki: Suomen Rakennusinsinöörien Liitto RIL ry: 160+32 p.

RIL 216-2013, 2013. Rakenteiden ja rakennusten elinkaaren hallinta. Helsinki: Suomen Rakennusinsinöörien Liitto RIL ry: 232+6 p.

Ruuska A. ym., 2013. Rakennusmateriaalien ympäristövaikutukset. Helsinki: Ympäristöministeriö. Available: http://julkaisut.valtioneuvosto.fi/handle/10138/41423 [referred 29.06.2017].

Saarinen, Elina. 2015. Rakennusteollisuus mukaan uudelleenkäyttökokeiluihin?. Uusiouutiset 2/2015. [web news]. Available: http://www.uusiouutiset.fi/UU215rakennus.pdf [referred 16.10.2018]

Sassi Paola. 2008. Defining closed-loop material cycle construction. Building Research & Information. [PDF-file]

Sassi Paola, a. Designing for dismantling, re-use and recycling. Greenspec. [web page]. Available: http://www.greenspec.co.uk/building-design/design-dismantling/ [referred 20.11.2018]

Sassi Paola, b. Study of current building methods that enable the dismantling of building structures and their classifications according to their ability to be reused, recycled or downcycled. School of the Built Environment, University of Nottingham. [PDF-file]

Savolainen, Ari. 2017. Talotekniikkakontissa talon kaikki tekniikka on samassa paikassa. [web article]. Available: http://www.rakennamme.fi/talotekniikka/talotekniikkakontissa-talon-kaikki-tekniikka-on-samassa-paikassa [referred 3.12.2018]

Schofield, Charlotte. 2017. New report reveals the benefits of circular business models for the built environment. Arup. [web page]. Available: https://www.arup.com/news-and-events/news/new-report-reveals-the-benefits-of-circular-business-models-for-the-built-environment [referred 16.10.2018]

Seppälä Helmi and Kajander Juho-Kusti. 2018. Reuse of buildings and construction components in Finland. A quick scan of the current situation. Boost Brothers [PDF-file]

Seppälä Juha, 2018. Designing steel framed buildings for steel reuse: a case study. [web document]. Available: http://jultika.oulu.fi/files/nbnfioulu-201803031288.pdf [referred 26.9.2018]

Sergio C. & Gorgolewski M., Unknown date. Facilitating greater reuse and recycling of structural steel in the construction and demolition process. Reuse-Steel Case Study 4. Reuse of structural steel at bedZED. Toronto: Department of Architectural Science at Ryerson University. 4 p. Available: http://www.reuse-steel.org/files/projects/bedzed/bedzed%20case%20study%205-5.pdf [referred 19.07.2017].

SFS-EN 1990+A1+AC, 2006. Eurocode. Basis of structural design. Helsinki: Finnish Standards Association SFS. 284 p.

Sitra, 2014. Sitran selvityksiä 84. Kiertotalouden mahdollisuudet Suomelle. [web document]. Sitra. Available: https://media.sitra.fi/2017/02/23221555/Selvityksia84.pdf [referred 14.9.2018].

Stahel W. R., 2016. Circular economy. Nature 531. p. 435-438.

Statistics of Finland. Waste statistics [web publication]. Available: http://www.stat.fi/til/jate/2016/jate_2016_2018-08-31_tie_001_en.html [referred 2.10.2018]

SteelConstruction.info. The recycling and reuse survey. [web page]. Available: https://www.steelconstruction.info/The_recycling_and_reuse_survey [referred 7.2.2019]

Ongelin P. & Valkonen I., 2016. SSAB Domex tube rakenneputket EN 1993 – Käsikirja 2016. Hämeenlinna: SSAB Europe Oy. 688 p. 978-952-93-7448-9.

Steffen W., Richardson K., Rockström J., Cornell S., Fetzer I., Bennett E., Biggs R., Carpenter S., de Vries W., de Wit C., Folke C., Gerten D., Heinke J., Mace G., Persson L., Ramanathan V., Reyers B. & Sörlin S., 2015. Planetary Boundaries: Guiding human development on a changing planet. Science 347 (6223), Article number 1259855.

Suomen Arkkitehtiliitto, 2017. Energiatehokas ja ekologisesti kestävä rakennus. [verkkodokumentti] Helsinki: Safa. Available: https://www.safa.fi/fin/safa/kestavan_suunnittelun_sivusto_-_eko-boxi/energiatehokas_ja_ekologisesti_kestava_rakennus/ [referred 09.08.2017].

Talja Asko. 2013. WP 2.1 Guidance for design for deconstruction. VTT Technical Research Centre of Finland. [web document] Available: https://www.vtt.fi/files/sites/reuse/S2_3_Guidance_for_design_for_deconstruction.pdf [referred 25.10.2018]

Talja A., 2015. Rakennusten suunnittelu uudelleenkäyttöä ja kierrätystä varten. Espoo: VTT. Available: http://www.vtt.fi/inf/julkaisut/muut/2014/VTT-R-00736-14.pdf [referred 29.06.2017].

Tatiya Amol, Zhao Dong, Syal Matt, Berghorn George H. and LaMore Rex. 2017. Cost prediction model for building deconstruction in urban areas. Journal of Cleaner Production [PDF-file]

Teräsrakenneyhdistys Ry, 2014. Teräsrakenteiden suunnittelu ja mitoitus Eurocode 3 -oppikirja. Helsinki: Teräsrakenneyhdistys Ry. 183 p.

Tingley Danielle Densley and Allwood Julian. 2014. Reuse of structural steel: the opportunities and challenges. Conference paper for European Steel Environment & Energy Congress 2014 [PDF-file]

Tompuri Vesa. 2018. Kunnat ja hallitus suosisivat elinkaarimallia, mutta urakoitsijoiden tarjoushalukkuus on vähäistä. Rakennuslehti. [web news]. Available: https://www.rakennuslehti.fi/2018/04/kunnat-ja-hallitus-suosisivat-elinkaarimallia-mutta-urakoitsijoiden-tarjoushalukkuus-on-vahaista/ [referred 23.1.2019]

TUDelft. Façade Leasing pilot project at TU Delft. [web page]. Available: https://www.tudelft.nl/en/architecture-and-the-built-environment/research/projects/green-building-innovation/facade-leasing/facade-leasing-pilot-project-at-tu-delft/ [referred 16.11.2018]

Ungureanu Viorel, Fechete Horia, Dubina Dan, Sansom Michael, Pyschny Dominik, Hradil Petr and Kesti Jyrki. 2018. Factsheets on review of existing deconstruction cases. PROGRESS 2017-2020. [PDF-file]

Van den Brink R., Prins M., Straub A., and Ploeger H.D. 2017. Finding the right incentives; circular business models for the construction industry. International research conference 2017: Shaping tomorrow's built environment. Conference proceedings. [PDF-file]

Vares S., Ojanen T., Pohjanne P. & Häkkinen T., 2008. ENNUS-teräs. Teräsrakenteiden käyttöiän ennakointi. Espoo: VTT. Available: http://www.terasrakenneyhdistys.fi/document/1/146/09ca26f/ENNUS_teras_dokumentaatio.pdf [referred 29.06.2017].

Vartiainen Jari and Huhtala Kalle. Project managers. Lehto Tilat Oy. 2019. Interview conducted 17.1.2019. Interviewer: Olli-Pekka Pajala

Vehviläinen I., Pesola A., Heljo J., Vihola J., Jääskeläinen S., Kalenoja H., Lahti P., Mäkelä K. & Ristimäki M., 2010. Rakennetun ympäristön energiankäyttö ja kasvihuonepäästöt. Helsinki: Sitra. 125 p. Available: http://era17.fi/wp-content/uploads/2010/10/sitran_selvityksia_39.pdf [referred 28.06.2017].

Vimpari Jussi, Junnila Seppo. 2013. Value influencing mechanism of green certificates in the discounted cash flow valuation. International Journal of Strategic Property Management [PDF-file]

Vimpari Jussi, Kajander Juho-Kusti and Junnila Seppo. 2014. Valuing flexibility in a retrofit investment. Journal of Corporate Real Estate [PDF-file]

Virtanen Pekka V. 1990. Kiinteistöarvioinnin perusteet. Otatieto Oy. p. 142+24

VTT. 2013. ReUSE – Repetitive Utilization of Structural Elements [web page]. Available: https://www.vtt.fi/sites/reuse/en/reuse-repetitive-utilization-of-structural-elements [referred 10.10.2018]

Väisänen P., 2007. Teräs. Perustietoa arkkitehtiopiskelijalle. Tampere: TKK Available: http://www.terasrakenneyhdistys.fi/document/1/40/66e53a5/Teras_web.pdf [Referred 29.06.2017].

Wautelet Thibault. 2018. The Concept of Circular Economy: its Origins and its Evolution. Working Paper. [PDF-file]

Webster M. & Costello D., (2005). Designing structural systems for deconstruction: How to extend a new building's useful life and prevent it from going to waste when the end finally comes. Atlanta: The 2005 Greenbuild conference. 14 p. Available: http://www.lifecyclebuilding.org/docs/Designing%20Structural%20Systems%20for%20Deconstruction.pdf [referred 04.07.2017].

World Economic Forum. 2016. Shaping the Future of Construction - A Breakthrough in Mindset and Technology. World Economic Forum - prepared in collaboration with The Boston Consulting Group. Available: http://www3.weforum.org/docs/WEF_Shaping_the_Future_of_Construction_full_report__.pdf [referred 18.10.2018]

World Steel Association, 2017. World Steel in Figures. Bryssel: World Steel Association. Available: https://www.worldsteel.org/en/dam/jcr:0474d208-9108-4927-ace8-4ac5445c5df8/World+Steel+in+Figures+2017.pdf [referred 03.07.2017].

YSE 1998. Rakennusurakan yleiset sopimusehdot. RT 16-10660.

Appendix 1. Roof self weight calculation

Self-weight of roof

Weight for corrugated sheet (Ruukki T153-40L-840-15)

$m_1 := 21 \frac{kg}{m^2}$ $\quad g = 9.807 \frac{m}{s^2}$

$g_1 := m_1 \cdot g = 0.206 \frac{kN}{m^2}$

Weight for mineral wool (Paroc ROS 50)

$m_2 := 130 \frac{kg}{m^3}$

Mineral wool layer thickness

$d := 0.4m$

$g_2 := m_2 \cdot d \cdot g = 0.51 \frac{kN}{m^2}$

Weight for tin roof (Ruukki T20S)

$m_3 := 4.6 \frac{kg}{m^2}$

$g_3 := m_3 \cdot g = 0.045 \frac{kN}{m^2}$

Total self-weight

$g_{tot} := g_1 + g_2 + g_3 = 0.761 \frac{kN}{m^2}$

Appendix 2. Total wind pressure calculation with force coefficient method

Total wind pressure calculations

Basic data

Terrain class: I $h := 11.5m$ Dynamic wind pressure

$$q_{p0} := 0.79 \frac{kN}{m^2}$$

Force coefficient for longer side

$$d_1 := 30m \quad b_1 := 42m \quad \frac{d_1}{b_1} = 0.714$$

$$h = 11.5\,m \qquad h < 15m = 1$$

RIL 201-1-2008, table 5.1S.

$$\lambda_1 := 2 \cdot \frac{h}{b_1} = 0.548 \qquad \lambda_1 < 1 = 1$$

Interpolated value of force coefficient, RIL 201-1-2008, table 5.2S.

$$c_{f1} := \left| \frac{1.44 - 1.28}{1 - 0.7} \cdot \left(\frac{d_1}{b_1} - 0.7 \right) - 1.44 \right| = 1.432$$

Force coefficient for shorter side

$$d_2 := 42m \quad b_2 := 30m \quad \frac{d_2}{b_2} = 1.4$$

$$h = 11.5\,m \qquad h < 15m = 1$$

RIL 201-1-2008, table 5.1S.

$$\lambda_2 := 2 \cdot \frac{h}{b_2} = 0.767$$

Interpolated value of force coefficient, RIL 201-1-2008, table 5.2S.

$$c_{f2} := \left| \frac{1.28 - 0.99}{2 - 1} \cdot \left(\frac{d_2}{b_2} - 1 \right) - 1.28 \right| = 1.164$$

Total pressure wind load when wind is blowing to side of the building

$$c_{scd} := 1$$

$$c_{f1} = 1.432$$

$$q_{p0} = 0.79 \frac{kN}{m^2}$$

$$f_{w.1} := c_{scd} \cdot c_{f1} \cdot q_{p0} = 1.132 \frac{kN}{m^2}$$

Total pressure wind load when wind is blowing to end of the building

$$c_{scd} = 1$$

$$c_{f2} = 1.164$$

$$q_{p0} = 0.79 \frac{kN}{m^2}$$

$$f_{w.2} := c_{scd} \cdot c_{f2} \cdot q_{p0} = 0.92 \frac{kN}{m^2}$$

Appendix 3. Top chord manual calculation report

Top chord designing

Forces from calculation model

$N_{ed} := 1098.23kN \quad M_{ed} := 22.84kN \cdot m$

CFRHS 200x200x10
Cross section class 1

$f_y := 355 \frac{N}{mm^2} \quad A := 7257mm^2 \quad E := 210 \cdot 10^3 \frac{N}{mm^2}$

$I := 4251 \cdot 10^4 mm^4 \quad W_{el} := 425.1 \cdot 10^3 mm^3 \quad b := 200mm \quad h := 200mm \quad t := 10mm$

$N_{crd} := 2576kN \quad M_{crd} := 180.4kN \cdot m \quad \gamma_{M0} := 1$

$\frac{N_{ed}}{N_{crd}} = 0.426$ OK $\quad \frac{M_{ed}}{M_{crd}} = 0.127$ OK

$0.5 \cdot (A - 2 \cdot b \cdot t) \cdot \frac{f_y}{\gamma_{M0}} = 5.781 \times 10^5 N \quad N_{ed} = 1.098 \times 10^6 N$

Ned is bigger so bending strength has to be reduced (SSAB-Domex-Tube-Rakenneputket-Käsikirja 2016, p. 124, clauses 2.123a & 2.123b)

$M_{plyrd} := M_{crd} \quad N_{plrd} := N_{crd}$

$n := \frac{N_{ed}}{N_{plrd}} = 0.426 \quad a_w := \frac{A - 2 \cdot b \cdot t}{A} = 0.449$

$M_{nyrd} := M_{plyrd} \cdot \frac{1 - n}{1 - a_w} = 187.756 \cdot kN \cdot m$

$\frac{M_{ed}}{M_{nyrd}} = 0.122$

Chord's effective length horizontally: 6,2 m

Chord's effective length vertically: 3,8m

Horizontal buckling authoritative

$L_{cry} := 6200mm \quad \gamma_{M1} := 1.0 \quad N_{cry} := \pi^2 \cdot E \cdot \frac{I}{L_{cry}^2} = 2.292 \times 10^6 N$

$\lambda_y := \left(A \cdot \frac{f_y}{N_{cry}} \right)^{0.5} = 1.06$

Cold rolled tubular section, buckling curve c

$\alpha := 0.49$

$\phi := 0.5\left[1 + \alpha\cdot\left(\lambda_y - 0.2\right) + \lambda_y^{\,2}\right] = 1.273$

Reduction coefficient

$$\chi_y := \frac{1}{\phi + \sqrt{\left(\phi^2 - \lambda_y^{\,2}\right)}} = 0.506$$

Buckling strength

$$N_{byrd} := \chi_y\cdot A\cdot\frac{f_y}{\gamma_{M1}} = 1.303\times 10^6 N$$

$$\frac{N_{ed}}{N_{byrd}} = 0.843 \qquad \text{OK}$$

Interaction of buckling and bending:

Lateral buckling does not reduce bending strength with square section, so χlt=1,0

$\psi := 0$ Secured simplification (Teräsrakenteiden suunnittelu ja mitoitus EC 3 oppikirja, Liite L3.7)

$M_{ed} = 2.284\times 10^7\cdot N\cdot mm \qquad \chi_{LT} := 1.0$

$C_{my} := 0.6 + 0.4\cdot\psi = 0.6$

Interaction parameter (Teräsrakenteiden suunnittelu ja mitoitus EC 3 oppikirja, Liite L3.7)

$N_{rk} := f_y\cdot A = 2.576\times 10^6 N$

$$k_{yy1} := C_{my}\cdot\left[1 + \left(\lambda_y - 0.2\right)\cdot\frac{N_{ed}}{\chi_y\cdot\frac{N_{rk}}{\gamma_{M1}}}\right] = 1.035$$

$$k_{yy2} := C_{my}\cdot\left(1 + 0.8\cdot\frac{N_{ed}}{\chi_y\cdot\frac{N_{rk}}{\gamma_{M1}}}\right) = 1.005$$

$k_{yy} := \min(k_{yy1}, k_{yy2}) = 1.005$ $\Delta M_{ed} := 0$

$M_{yrk} := M_{crd}$

Interaction equation

$$\frac{N_{ed}}{\chi_y \cdot \frac{N_{rk}}{\gamma_{M1}}} + k_{yy} \cdot \frac{M_{ed} + \Delta M_{ed}}{\chi_{LT} \cdot \frac{M_{yrk}}{\gamma_{M1}}} = 0.97$$

Chosen top chord CFRHS 200x200x10 is correct section with ratio of 0,97.

Appendix 4. Top chord calculation report from Robot

STEEL DESIGN

CODE: *SFS-EN 1993-1:2005/NA:2007/AC:2009, Eurocode 3: Design of steel structures.*
ANALYSIS TYPE: Member Verification

CODE GROUP:
MEMBER: 2 Paarre **POINT:** 1 **COORDINATE:** x = 0.50 L = 7.54 m

LOADS:
Governing Load Case: 8 ULS /24/ 1*1.15 + 2*1.15 + 3*1.35 + 6*0.90

MATERIAL:
S355 (S355) fy = 355.00 MPa

SECTION PARAMETERS: SQUA 200x200x10

h=20.0 cm	gM0=1.00	gM1=1.00	
b=20.0 cm	Ay=36.28 cm2	Az=36.28 cm2	Ax=72.57 cm2
tw=1.0 cm	Iy=4251.06 cm4	Iz=4251.06 cm4	Ix=7071.73 cm4
tf=1.0 cm	Wply=508.08 cm3	Wplz=508.08 cm3	

INTERNAL FORCES AND CAPACITIES:

N,Ed = 1092.80 kN	My,Ed = -22.73 kN*m	Mz,Ed = 0.50 kN*m	Vy,Ed = -0.50 kN
Nc,Rd = 2576.11 kN	My,Ed,max = -30.80 kN*m		Mz,Ed,max = 2.37 kN*m
	Vy,T,Rd = 742.92 kN		
Nb,Rd = 1303.14 kN	My,c,Rd = 180.37 kN*m	Mz,c,Rd = 180.37 kN*m	Vz,Ed = 47.61 kN
	MN,y,Rd = 133.90 kN*m	MN,z,Rd = 133.90 kN*m	Vz,T,Rd = 742.92 kN
	Mb,Rd = 180.37 kN*m		Tt,Ed = 0.15 kN*m
			Class of section = 1

LATERAL BUCKLING PARAMETERS:

z = 0.00	Mcr = 1662.10 kN*m	Curve,LT - d	XLT = 1.00
Lcr,low=15.07 m	Lam_LT = 0.33	fi,LT = 0.51	XLT,mod = 1.00

BUCKLING PARAMETERS:

About y axis:		About z axis:	
Ly = 15.07 m	Lam_y = 1.06	Lz = 15.07 m	Lam_z = 0.64
Lcr,y = 6.20 m	Xy = 0.51	Lcr,z = 3.75 m	Xz = 0.76
Lamy = 81.00	kyy = 1.50	Lamz = 48.99	kyz = 0.67

VERIFICATION FORMULAS:

Section strength check:
N,Ed/Nc,Rd = 0.42 < 1.00 (6.2.4.(1))
(My,Ed/MN,y,Rd)^ 2.08 + (Mz,Ed/MN,z,Rd)^2.08 = 0.02 < 1.00 (6.2.9.1.(6))
Vy,Ed/Vy,T,Rd = 0.00 < 1.00 (6.2.6-7)
Vz,Ed/Vz,T,Rd = 0.06 < 1.00 (6.2.6-7)
Tau,ty,Ed/(fy/(sqrt(3)*gM0)) = 0.00 < 1.00 (6.2.6)
Tau,tz,Ed/(fy/(sqrt(3)*gM0)) = 0.00 < 1.00 (6.2.6)

Global stability check of member:
Lambda,y = 81.00 < Lambda,max = 210.00 Lambda,z = 48.99 < Lambda,max = 210.00 STABLE
My,Ed,max/Mb,Rd = 0.17 < 1.00 (6.3.2.1.(1))
N,Ed/(Xy*N,Rk/gM1) + kyy*My,Ed,max/(XLT*My,Rk/gM1) + kyz*Mz,Ed,max/(Mz,Rk/gM1) = 1.10 > 1.00

(6.3.3.(4))
N,Ed/(Xz*N,Rk/gM1) + kzy*My,Ed,max/(XLT*My,Rk/gM1) + kzz*Mz,Ed,max/(Mz,Rk/gM1) = 0.73 < 1.00
(6.3.3.(4))

LIMIT DISPLACEMENTS

Deflections

uy = 0.2 cm < uy max = L/300.00 = 5.0 cm Verified
Governing Load Case: 11 SLS /13/ 1*1.00 + 2*1.00 + 3*1.00 + 6*0.60
uz = 1.7 cm < uz max = L/300.00 = 5.0 cm Verified
Governing Load Case: 11 SLS /13/ 1*1.00 + 2*1.00 + 3*1.00 + 6*0.60
u inst,y = 0.2 cm < u inst,max,y = L/300.00 = 5.0 cm Verified
Governing Load Case: 1*3 + 0.6*6
u inst,z = 1.2 cm < u inst,max,z = L/300.00 = 5.0 cm Verified
Governing Load Case: 1*3 + 0.6*6

Displacements

vx = 0.1 cm < vx max = L/300.00 = 5.0 cm Verified
Governing Load Case: 11 SLS /13/ 1*1.00 + 2*1.00 + 3*1.00 + 6*0.60
vy = 0.3 cm < vy max = L/300.00 = 5.0 cm Verified
Governing Load Case: 11 SLS /12/ 1*1.00 + 2*1.00 + 3*1.00 + 5*0.60

Incorrect section !!!

Appendix 5. Utilization ratios for structural components

Columns

Member		Section	Material	Lay	Laz	Ratio	Case	Ratio(vx)	Case (vx)	Ratio(vy)	Case (vy)
47 Pilari	OK	HEA 240	S355	62.68	104.95	0.86	10 ULS /17/	0.19	13 SLS /15/	0.04	13 SLS /3/
110 Pilari	OK	HEA 240	S355	62.68	104.95	0.86	10 ULS /17/	0.18	13 SLS /15/	0.04	13 SLS /7/
111 Pilari	OK	HEA 240	S355	62.68	104.95	0.86	10 ULS /13/	0.20	13 SLS /15/	0.06	13 SLS /7/
48 Pilari	OK	HEA 240	S355	62.68	104.95	0.86	10 ULS /13/	0.21	13 SLS /15/	0.06	13 SLS /3/
20 Pilari	OK	HEA 240	S355	62.68	104.95	0.84	10 ULS /17/	0.11	13 SLS /11/	0.05	13 SLS /3/
131 Pilari	OK	HEA 240	S355	62.68	104.95	0.84	10 ULS /17/	0.11	13 SLS /11/	0.05	13 SLS /7/
132 Pilari	OK	HEA 240	S355	62.68	104.95	0.84	10 ULS /13/	0.11	13 SLS /15/	0.07	13 SLS /7/
21 Pilari	OK	HEA 240	S355	62.68	104.95	0.84	10 ULS /13/	0.12	13 SLS /15/	0.07	13 SLS /3/
68 Pilari	OK	HEA 240	S355	62.68	104.95	0.84	10 ULS /17/	0.22	13 SLS /15/	0.04	13 SLS /3/
89 Pilari	OK	HEA 240	S355	62.68	104.95	0.84	10 ULS /17/	0.22	13 SLS /11/	0.04	13 SLS /7/
90 Pilari	OK	HEA 240	S355	62.68	104.95	0.83	10 ULS /13/	0.22	13 SLS /15/	0.05	13 SLS /7/
69 Pilari	OK	HEA 240	S355	62.68	104.95	0.83	10 ULS /13/	0.24	13 SLS /15/	0.06	13 SLS /3/
228 Pilari	OK	HEA 240	S355	71.03	118.94	0.69	10 ULS /5/	0.09	13 SLS /11/	0.09	13 SLS /3/
232 Pilari	OK	HEA 240	S355	71.03	118.94	0.69	10 ULS /9/	0.09	13 SLS /11/	0.09	13 SLS /7/
231 Pilari	OK	HEA 240	S355	71.03	118.94	0.66	10 ULS /9/	0.09	13 SLS /15/	0.09	13 SLS /7/
227 Pilari	OK	HEA 240	S355	71.03	118.94	0.66	10 ULS /5/	0.09	13 SLS /15/	0.09	13 SLS /3/
233 Pilari	OK	HEA 240	S355	66.85	111.94	0.60	10 ULS /11/	0.10	13 SLS /11/	0.08	13 SLS /8/
229 Pilari	OK	HEA 240	S355	66.85	111.94	0.60	10 ULS /7/	0.10	13 SLS /11/	0.08	13 SLS /2/
230 Pilari	OK	HEA 240	S355	66.85	111.94	0.59	10 ULS /10/	0.10	13 SLS /15/	0.08	13 SLS /9/
226 Pilari	OK	HEA 240	S355	66.85	111.94	0.59	10 ULS /6/	0.09	13 SLS /15/	0.08	13 SLS /2/
135 Pilari	OK	HEA 240	S355	62.68	104.95	0.36	10 ULS /5/	0.11	13 SLS /11/	0.06	13 SLS /7/
24 Pilari	OK	HEA 240	S355	62.68	104.95	0.36	10 ULS /9/	0.11	13 SLS /11/	0.05	13 SLS /3/
136 Pilari	OK	HEA 240	S355	62.68	104.95	0.36	10 ULS /6/	0.10	13 SLS /15/	0.07	13 SLS /7/
25 Pilari	OK	HEA 240	S355	62.68	104.95	0.36	10 ULS /10/	0.10	13 SLS /15/	0.07	13 SLS /3/

Beams

Member		Section	Material	Lay	Laz	Ratio	Case	Ratio(uy	Case (uy)	Ratio(uz	Case (uz)
22 Palkki	OK	HEA 180	S355	83.24	137.16	0.67	10 ULS /51/	0.01	13 SLS /6/	0.20	13 SLS /26/
133 Palkki	OK	HEA 180	S355	83.24	137.16	0.67	10 ULS /51/	0.01	13 SLS /2/	0.20	13 SLS /23/
23 Palkki	OK	HEA 180	S355	83.24	137.16	0.66	10 ULS /44/	0.01	13 SLS /17/	0.20	13 SLS /25/
134 Palkki	OK	HEA 180	S355	83.24	137.16	0.66	10 ULS /41/	0.01	13 SLS /11/	0.20	13 SLS /22/

Top chords

Member		Section	Material	Lay	Laz	Ratio	Case	Ratio(uy	Case (uy)	Ratio(uz	Case (uz)
113 Paarre	✗	SQUA 200x20	S355	81.00	48.99	1.11	10 ULS /46/	0.06	13 SLS /27/	0.42	13 SLS /21/
309 Paarre	✗	SQUA 200x20	S355	81.00	48.99	1.11	10 ULS /46/	0.06	13 SLS /27/	0.42	13 SLS /24/
112 Paarre	✗	SQUA 200x20	S355	81.00	48.99	1.09	10 ULS /43/	0.06	13 SLS /24/	0.43	13 SLS /30/
308 Paarre	✗	SQUA 200x20	S355	81.00	48.99	1.09	10 ULS /40/	0.06	13 SLS /21/	0.43	13 SLS /30/
71 Paarre	✗	SQUA 200x20	S355	81.00	48.99	1.06	10 ULS /49/	0.01	13 SLS /11/	0.42	13 SLS /27/
29 Paarre	✗	SQUA 200x20	S355	81.00	48.99	1.06	10 ULS /49/	0.02	13 SLS /15/	0.42	13 SLS /30/
50 Paarre	✗	SQUA 200x20	S355	81.00	48.99	1.06	10 ULS /49/	0.01	13 SLS /15/	0.42	13 SLS /27/
92 Paarre	✗	SQUA 200x20	S355	81.00	48.99	1.06	10 ULS /49/	0.02	13 SLS /11/	0.42	13 SLS /30/
70 Paarre	✗	SQUA 200x20	S355	81.00	48.99	1.06	10 ULS /49/	0.02	13 SLS /3/	0.42	13 SLS /30/
49 Paarre	✗	SQUA 200x20	S355	81.00	48.99	1.06	10 ULS /49/	0.02	13 SLS /7/	0.42	13 SLS /30/
28 Paarre	✗	SQUA 200x20	S355	81.00	48.99	1.06	10 ULS /49/	0.02	13 SLS /8/	0.42	13 SLS /30/
91 Paarre	✗	SQUA 200x20	S355	81.00	48.99	1.06	10 ULS /49/	0.02	1*4	0.42	13 SLS /30/

Bottom chords

Member		Section	Material	Lay	Laz	Ratio	Case	Ratio(uy	Case (uy)	Ratio(uz	Case (uz)
222 Paarre	OK	SQUA 160x160x6	S355	221.76	180.13	0.83	10 ULS /43/	0.01	13 SLS /5/	0.65	13 SLS /27/
221 Paarre	OK	SQUA 160x160x6	S355	221.76	180.13	0.83	10 ULS /40/	0.01	13 SLS /7/	0.65	13 SLS /27/
220 Paarre	OK	SQUA 160x160x6	S355	99.27	60.04	0.83	10 ULS /40/	0.01	13 SLS /15/	0.65	13 SLS /21/
225 Paarre	OK	SQUA 160x160x6	S355	99.27	60.04	0.83	10 ULS /43/	0.01	13 SLS /11/	0.65	13 SLS /24/
307 Paarre	OK	SQUA 160x160x6	S355	221.76	180.13	0.83	10 ULS /43/	0.15	13 SLS /21/	0.65	13 SLS /24/
224 Paarre	OK	SQUA 160x160x6	S355	221.76	180.13	0.83	10 ULS /40/	0.15	13 SLS /24/	0.65	13 SLS /21/

Web bars from example truss

Member		Section	Material	Lay	Laz	Ratio	Case
74 Uuma	OK	SQUA 140x14	S355	38.73	38.73	0.62	10 ULS /40/
82 Uuma	OK	SQUA 140x14	S355	38.73	38.73	0.62	10 ULS /40/
81 Uuma	OK	SQUA 140x14	S355	35.07	35.07	0.54	10 ULS /43/
73 Uuma	OK	SQUA 140x14	S355	35.07	35.07	0.54	10 ULS /43/
84 Uuma	OK	SQUA 140x14	S355	42.78	42.78	0.30	10 ULS /46/
76 Uuma	OK	SQUA 140x14	S355	42.78	42.78	0.29	10 ULS /40/
83 Uuma	OK	SQUA 140x14	S355	38.73	38.73	0.24	10 ULS /43/
75 Uuma	OK	SQUA 140x14	S355	38.73	38.73	0.24	10 ULS /43/
87 Uuma	OK	SQUA 140x14	S355	47.12	47.12	0.15	10 ULS /50/
79 Uuma	OK	SQUA 140x14	S355	47.12	47.12	0.14	10 ULS /51/
78 Uuma	OK	SQUA 140x14	S355	47.12	47.12	0.11	10 ULS /41/
86 Uuma	OK	SQUA 140x14	S355	47.12	47.12	0.11	10 ULS /48/
88 Uuma	OK	SQUA 140x14	S355	51.68	51.68	0.10	10 ULS /50/
80 Uuma	OK	SQUA 140x14	S355	51.68	51.68	0.09	10 ULS /51/
77 Uuma	OK	SQUA 140x14	S355	42.78	42.78	0.07	10 ULS /44/
85 Uuma	OK	SQUA 140x14	S355	42.78	42.78	0.07	10 ULS /45/

Wall braces

Member		Section	Material	Lay	Laz	Ratio	Case
3 vinoside	OK	SQUA 120x12	S355	125.67	125.67	0.55	10 ULS /33/
305 vinoside	OK	SQUA 120x12	S355	125.67	125.67	0.55	10 ULS /33/
26 vinoside	OK	SQUA 120x12	S355	125.67	125.67	0.55	10 ULS /29/
306 vinoside	OK	SQUA 120x12	S355	125.67	125.67	0.54	10 ULS /29/
27 vinoside	OK	SQUA 120x12	S355	114.87	114.87	0.51	10 ULS /5/
199 vinoside	OK	SQUA 120x12	S355	114.87	114.87	0.51	10 ULS /9/
1 vinoside	OK	SQUA 120x12	S355	114.87	114.87	0.40	10 ULS /9/
201 vinoside	OK	SQUA 120x12	S355	114.87	114.87	0.39	10 ULS /5/

Horizontal roof braces

Member		Section	Material	Lay	Laz	Ratio	Case
158 Simple bar	OK	SQUA 120x12	S355	127.44	127.44	0.40	10 ULS /29/
154 Simple bar	OK	SQUA 120x12	S355	127.44	127.44	0.40	10 ULS /29/
156 Simple bar	OK	SQUA 120x12	S355	127.44	127.44	0.33	10 ULS /29/
237 Simple bar	OK	SQUA 120x12	S355	127.44	127.44	0.21	10 ULS /33/
153 Simple bar	OK	SQUA 120x12	S355	127.44	127.44	0.17	10 ULS /25/
151 Simple bar	OK	SQUA 120x12	S355	127.44	127.44	0.17	10 ULS /25/
139 Simple bar	OK	SQUA 120x12	S355	127.44	127.44	0.17	10 ULS /25/
157 Simple bar	OK	SQUA 120x12	S355	127.44	127.44	0.17	10 ULS /21/
159 Simple bar	OK	SQUA 120x12	S355	127.44	127.44	0.17	10 ULS /21/
161 Simple bar	OK	SQUA 120x12	S355	127.44	127.44	0.16	10 ULS /21/
236 Simple bar	OK	SQUA 120x12	S355	127.44	127.44	0.16	10 ULS /21/
235 Simple bar	OK	SQUA 120x12	S355	127.44	127.44	0.16	10 ULS /21/
238 Simple bar	OK	SQUA 120x12	S355	127.44	127.44	0.16	10 ULS /25/
239 Simple bar	OK	SQUA 120x12	S355	127.44	127.44	0.16	10 ULS /25/
284 Simple bar	OK	SQUA 120x12	S355	127.44	127.44	0.15	10 ULS /9/
291 Simple bar	OK	SQUA 120x12	S355	127.44	127.44	0.15	10 ULS /5/
246 Simple bar	OK	SQUA 120x12	S355	127.44	127.44	0.15	10 ULS /9/
285 Simple bar	OK	SQUA 120x12	S355	127.44	127.44	0.15	10 ULS /9/
245 Simple bar	OK	SQUA 120x12	S355	127.44	127.44	0.15	10 ULS /9/
290 Simple bar	OK	SQUA 120x12	S355	127.44	127.44	0.15	10 ULS /5/
244 Simple bar	OK	SQUA 120x12	S355	127.44	127.44	0.15	10 ULS /9/
242 Simple bar	OK	SQUA 120x12	S355	127.44	127.44	0.15	10 ULS /5/
289 Simple bar	OK	SQUA 120x12	S355	127.44	127.44	0.15	10 ULS /9/
243 Simple bar	OK	SQUA 120x12	S355	127.44	127.44	0.15	10 ULS /9/
234 Simple bar	OK	SQUA 120x12	S355	127.44	127.44	0.15	10 ULS /5/
240 Simple bar	OK	SQUA 120x12	S355	127.44	127.44	0.15	10 ULS /28/
298 Simple bar	OK	SQUA 120x12	S355	127.44	127.44	0.15	10 ULS /6/
304 Simple bar	OK	SQUA 120x12	S355	127.44	127.44	0.15	10 ULS /10/
247 Simple bar	OK	SQUA 120x12	S355	127.44	127.44	0.14	10 ULS /9/
280 Simple bar	OK	SQUA 120x12	S355	127.44	127.44	0.14	10 ULS /9/
241 Simple bar	OK	SQUA 120x12	S355	127.44	127.44	0.14	10 ULS /5/
292 Simple bar	OK	SQUA 120x12	S355	127.44	127.44	0.14	10 ULS /5/
140 Simple bar	OK	SQUA 120x12	S355	127.44	127.44	0.11	10 ULS /25/
152 Simple bar	OK	SQUA 120x12	S355	127.44	127.44	0.11	10 ULS /25/
162 Simple bar	OK	SQUA 120x12	S355	127.44	127.44	0.10	10 ULS /21/
160 Simple bar	OK	SQUA 120x12	S355	127.44	127.44	0.10	10 ULS /21/
155 Simple bar	OK	SQUA 120x12	S355	127.44	127.44	0.08	10 ULS /46/
299 Simple bar	OK	SQUA 120x12	S355	127.44	127.44	0.08	10 ULS /21/
303 Simple bar	OK	SQUA 120x12	S355	127.44	127.44	0.08	10 ULS /25/
300 Simple bar	OK	SQUA 120x12	S355	127.44	127.44	0.08	10 ULS /21/
302 Simple bar	OK	SQUA 120x12	S355	127.44	127.44	0.08	10 ULS /25/
301 Simple bar	OK	SQUA 120x12	S355	127.44	127.44	0.07	10 ULS /21/

Diagonal roof braces

Member		Section	Material	Lay	Laz	Ratio	Case
208 Simple bar	OK	SQUA 120x12	S355	180.68	180.68	0.89	10 ULS /13/
213 Simple bar	OK	SQUA 120x12	S355	180.68	180.68	0.86	10 ULS /29/
171 Simple bar	OK	SQUA 120x12	S355	180.68	180.68	0.49	10 ULS /29/
150 Simple bar	OK	SQUA 120x12	S355	180.68	180.68	0.48	10 ULS /29/
288 Simple bar	OK	SQUA 120x12	S355	180.68	180.68	0.47	10 ULS /9/
282 Simple bar	OK	SQUA 120x12	S355	180.68	180.68	0.45	10 ULS /5/
212 Simple bar	OK	SQUA 120x12	S355	180.68	180.68	0.44	10 ULS /17/
209 Simple bar	OK	SQUA 120x12	S355	180.68	180.68	0.43	10 ULS /33/
172 Simple bar	OK	SQUA 120x12	S355	180.68	180.68	0.39	10 ULS /13/
149 Simple bar	OK	SQUA 120x12	S355	180.68	180.68	0.34	10 ULS /13/
283 Simple bar	OK	SQUA 120x12	S355	180.68	180.68	0.27	10 ULS /33/
287 Simple bar	OK	SQUA 120x12	S355	180.68	180.68	0.27	10 ULS /33/
148 Simple bar	OK	SQUA 120x12	S355	142.62	142.62	0.23	10 ULS /18/
286 Simple bar	OK	SQUA 120x12	S355	142.62	142.62	0.23	10 ULS /15/
170 Simple bar	OK	SQUA 120x12	S355	142.62	142.62	0.23	10 ULS /18/
281 Simple bar	OK	SQUA 120x12	S355	142.62	142.62	0.23	10 ULS /15/
30 Simple bar	OK	SQUA 120x12	S355	180.68	180.68	0.17	10 ULS /5/

Appendix 6. Load-bearing sheet calculation

Sheets

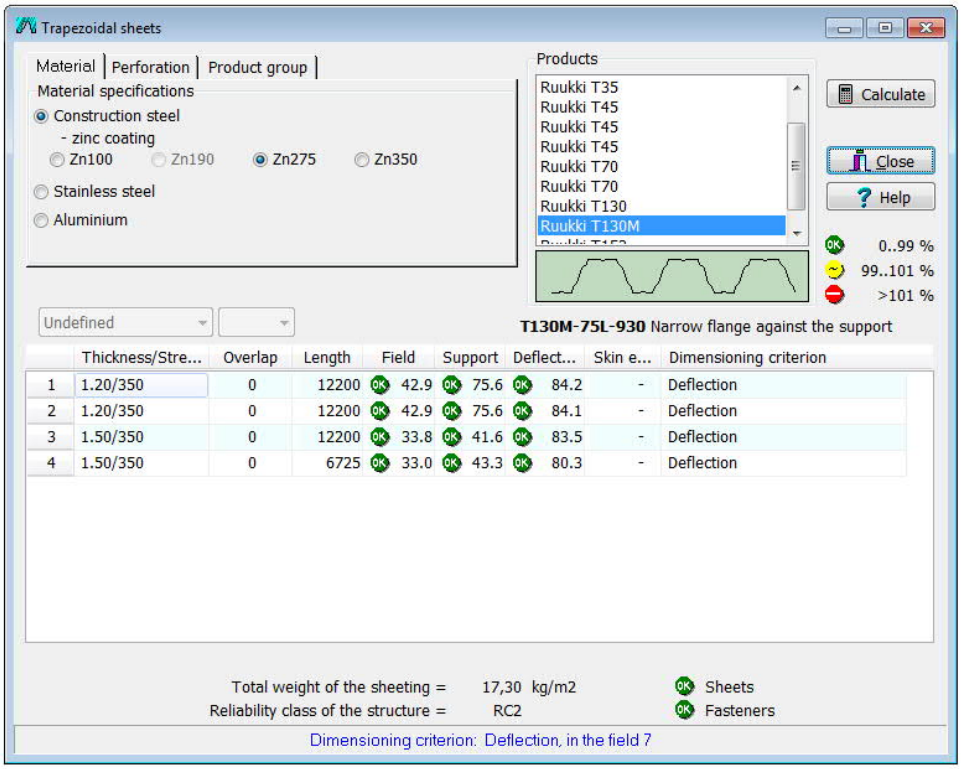

Fasteners

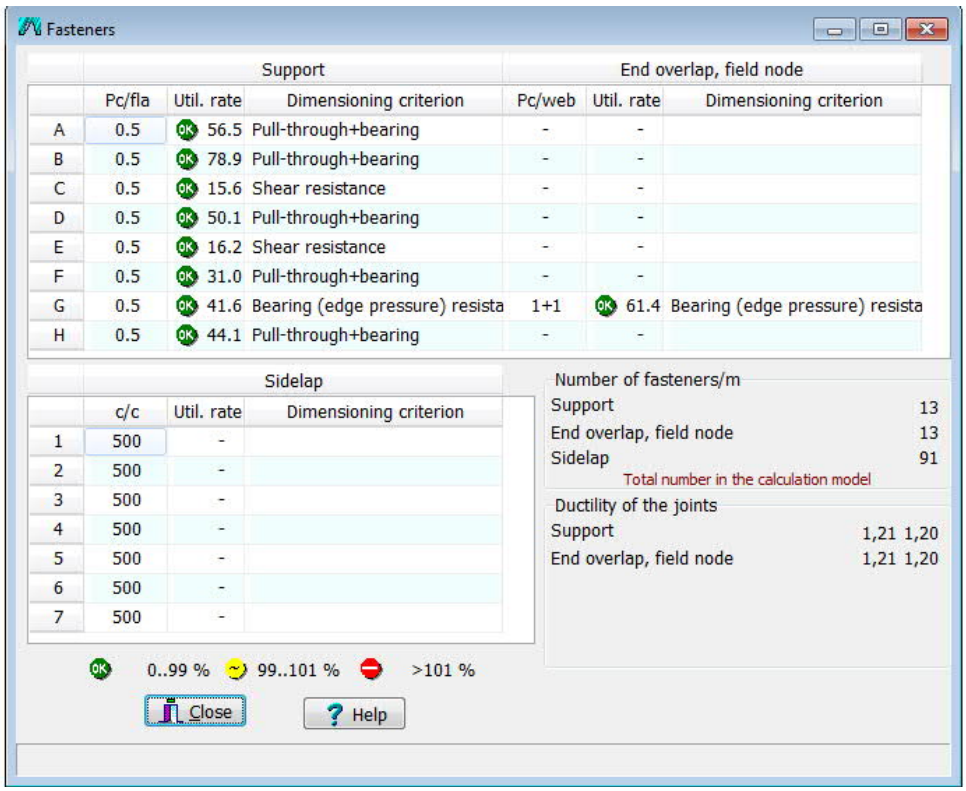

Appendix 7. Column splice calculation

Autodesk Robot Structural Analysis Professional 2016

Calculation of the column-to-column splice connection

EN 1993-1-8:2005/AC:2009

OK

Ratio **0,44**

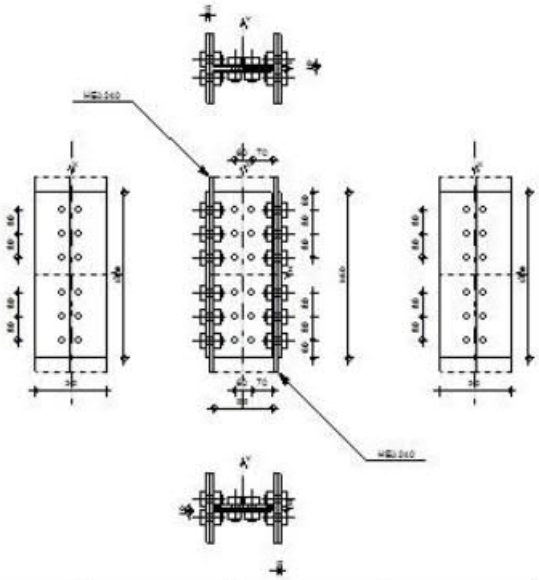

Bar / Point (m)	FX (kN)	FY (kN)	FZ (kN)	MX (kNm)	MY (kNm)	MZ (kNm)
Current value	399,17	0,09	27,84	-0,00	16,62	0,53
for bar:	47					
in point:	x=3,00 (m)					
47 / origin	401,21	0,09	58,42	-0,00	-113,25	0,79
47 / end	395,08	0,09	-33,32	-0,00	0,00	-0,00

GENERAL

Connection no.: 1
Connection name: Column Splice

LOWER COLUMN

Section: HEA 240

h_{c1} =	230	[mm]	Height of beam section
b_{fc1} =	240	[mm]	Width of beam section
t_{wc1} =	8	[mm]	Thickness of the web of beam section
t_{fc1} =	12	[mm]	Thickness of the flange of beam section
r_{c1} =	21	[mm]	Radius of beam section fillet
A_{c1} =	76,84	[cm^2]	Cross-sectional area of a beam
I_{yc1} =	7763,18	[cm^4]	Moment of inertia of the beam section

Material: S355

f_{yc1} =	355,00	[MPa]	Resistance
f_{uc1} =	490,00	[MPa]	

UPPER COLUMN

Section: HEA 240

h_{c2} =	230	[mm]	Height of beam section
b_{fc2} =	240	[mm]	Width of beam section
t_{wc2} =	8	[mm]	Thickness of the web of beam section
t_{fc2} =	12	[mm]	Thickness of the flange of beam section
r_{c2} =	21	[mm]	Radius of beam section fillet
A_{c2} =	76,84	[cm^2]	Cross-sectional area of a beam
I_{yc2} =	7763,18	[cm^4]	Moment of inertia of the beam section
Material:	S355		
f_{yc2} =	355,00	[MPa]	Resistance
f_{uc2} =	490,00	[MPa]	

SPLICE PLATE

Type: bilateral

l_{pw} =	560	[mm]	Plate length
h_{pw} =	200	[mm]	Plate height
t_{pw} =	10	[mm]	Plate thickness
Material:	S355		
f_{ypw} =	355,00	[MPa]	Design resistance
f_{upw} =	490,00	[MPa]	Tensile resistance

RIGHT EXTERNAL PLATE

l_{pe} =	560	[mm]	Plate length
h_{pe} =	240	[mm]	Plate height
t_{pe} =	10	[mm]	Plate thickness
Material:	S355		
f_{ype} =	355,00	[MPa]	Design resistance
f_{upe} =	490,00	[MPa]	Tensile resistance

LEFT EXTERNAL PLATE

l_{pe} =	560	[mm]	Plate length
h_{pe} =	240	[mm]	Plate height
t_{pe} =	10	[mm]	Plate thickness
Material:	S355		
f_{ype} =	355,00	[MPa]	Design resistance
f_{upe} =	490,00	[MPa]	Tensile resistance

LOWER SIDE

BOLTS CONNECTING A SPLICE PLATE WITH THE COLUMN WEB

The shear plane passes through the UNTHREADED portion of the bolt.
Connection category A

Class =	8.8		Bolt class
d =	24	[mm]	Bolt diameter
d_0 =	26	[mm]	Bolt opening diameter
A_s =	3,53	[cm^2]	Effective section area of a bolt
A_v =	4,52	[cm^2]	Area of bolt section
f_{yb} =	640,00	[MPa]	Yield strength of bolt
f_{ub} =	800,00	[MPa]	Bolt tensile resistance
n_h =	3		Number of bolt columns
n_v =	2		Number of bolt rows
e_1 =	70	[mm]	Level of first bolt
p_2 =	80	[mm]	Horizontal spacing

Class =	8.8		Bolt class
p_1 =	60	[mm]	Vertical spacing

BOLTS CONNECTING A FLANGE PLATE WITH THE COLUMN RIGHT FLANGE

The shear plane passes through the UNTHREADED portion of the bolt.
Connection category A

Class =	8.8		Bolt class
d =	24	[mm]	Bolt diameter
d_0 =	26	[mm]	Bolt opening diameter
A_s =	3,53	[cm^2]	Effective section area of a bolt
A_v =	4,52	[cm^2]	Area of bolt section
f_{yb} =	640,00	[MPa]	Yield strength of bolt
f_{ub} =	800,00	[MPa]	Bolt tensile resistance
n_h =	1		Number of bolt columns
n_v =	3		Number of bolt rows
e_1 =	60	[mm]	Level of first bolt
p_1 =	80	[mm]	Vertical spacing

BOLTS CONNECTING A FLANGE PLATE WITH THE COLUMN LEFT FLANGE

The shear plane passes through the UNTHREADED portion of the bolt.
Connection category A

Class =	8.8		Bolt class
d =	24	[mm]	Bolt diameter
d_0 =	26	[mm]	Bolt opening diameter
A_s =	3,53	[cm^2]	Effective section area of a bolt
A_v =	4,52	[cm^2]	Area of bolt section
f_{yb} =	640,00	[MPa]	Yield strength of bolt
f_{ub} =	800,00	[MPa]	Bolt tensile resistance
n_h =	1		Number of bolt columns
n_v =	3		Number of bolt rows
e_1 =	60	[mm]	Level of first bolt
p_1 =	80	[mm]	Vertical spacing

UPPER SIDE

BOLTS CONNECTING A SPLICE PLATE WITH THE COLUMN WEB

The shear plane passes through the UNTHREADED portion of the bolt.
Connection category A

Class =	8.8		Bolt class
d =	24	[mm]	Bolt diameter
d_0 =	26	[mm]	Bolt opening diameter
A_s =	3,53	[cm^2]	Effective section area of a bolt
A_v =	4,52	[cm^2]	Area of bolt section
f_{yb} =	640,00	[MPa]	Yield strength of bolt
f_{ub} =	800,00	[MPa]	Bolt tensile resistance
n_h =	3		Number of bolt columns
n_v =	2		Number of bolt rows
e_1 =	70	[mm]	Level of first bolt
p_2 =	80	[mm]	Horizontal spacing
p_1 =	60	[mm]	Vertical spacing

BOLTS CONNECTING A FLANGE PLATE WITH THE COLUMN RIGHT FLANGE

The shear plane passes through the UNTHREADED portion of the bolt.
Connection category A

Class =	8.8		Bolt class
d =	24	[mm]	Bolt diameter
d_0 =	26	[mm]	Bolt opening diameter
A_s =	3,53	[cm²]	Effective section area of a bolt
A_v =	4,52	[cm²]	Area of bolt section
f_{yb} =	640,00	[MPa]	Yield strength of bolt
f_{ub} =	800,00	[MPa]	Bolt tensile resistance
n_h =	1		Number of bolt columns
n_v =	3		Number of bolt rows
e_1 =	60	[mm]	Level of first bolt
p_1 =	80	[mm]	Vertical spacing

BOLTS CONNECTING A FLANGE PLATE WITH THE COLUMN LEFT FLANGE

The shear plane passes through the UNTHREADED portion of the bolt.
Connection category A

Class =	8.8		Bolt class
d =	24	[mm]	Bolt diameter
d_0 =	26	[mm]	Bolt opening diameter
A_s =	3,53	[cm²]	Effective section area of a bolt
A_v =	4,52	[cm²]	Area of bolt section
f_{yb} =	640,00	[MPa]	Yield strength of bolt
f_{ub} =	800,00	[MPa]	Bolt tensile resistance
n_h =	1		Number of bolt columns
n_v =	3		Number of bolt rows
e_1 =	60	[mm]	Level of first bolt
p_1 =	80	[mm]	Vertical spacing

MATERIAL FACTORS

γ_{M0} =	1,00	Partial safety factor	[2.2]
γ_{M2} =	1,25	Partial safety factor	[2.2]

LOADS

Case: Manual calculations.

ULTIMATE LIMIT STATE

N_{Ed1} =	399,17	[kN]	Axial force
$V_{y,Ed1}$ =	0,09	[kN]	Shear force
$V_{z,Ed1}$ =	28,00	[kN]	Shear force
$M_{y,Ed1}$ =	16,62	[kN*m]	Bending moment
$M_{Vz,Ed1}$ =	0,53	[kN*m]	Bending moment
N_{Ed2} =	399,17	[kN]	Axial force
$V_{y,Ed2}$ =	0,09	[kN]	Shear force
$V_{z,Ed2}$ =	28,00	[kN]	Shear force
$M_{y,Ed2}$ =	16,62	[kN*m]	Bending moment
$M_{Vz,Ed2}$ =	0,53	[kN*m]	Bending moment

RESULTS

Results for one side of connection (geometry and loads are symmetrical)

Axial force

Plate	A_i [cm2]	EQUIVALENT FORCES N_i [kN]	EQUIVALENT FORCES $N_i(M_{y,Ed})$ [kN]	Resultant force $N_{Ed,i}$ [kN]
	A_{pw}= 40,00	181,44	-	**$N_{Ed,pw}$= 181,44**

Plate	A_i [cm2]	EQUIVALENT FORCES N_i [kN]	EQUIVALENT FORCES $N_i(M_{y,Ed})$ [kN]	Resultant force $N_{Ed,i}$ [kN]
	A_{pfue}= 24,00	108,86	58,06	**$N_{Ed,pfue}$= 166,92**
	A_{pfle}= 24,00	108,86	-58,06	**$N_{Ed,pfle}$= 50,81**

$N_i=(N_{Ed}*A_i)/(2*A_{wp}+A_{pfue}+A_{pfle})$
$N_{Ed,i} = N_i+N_i(M_{y,Ed})$

Shear force Z

Plate	A_i [cm2]	$V_{zEd,i}$ [kN]
	$A_{z,pw}$= 40,00	$V_{z,Ed,pw}$= 28,00

Shear force Y

Plate	$A_{y,i}$ [cm2]	$V_{y,Ed,i}$ [kN]
	$A_{y,fupe}$= 24,00	$V_{y,Ed,fupe}$= 0,04
	$A_{y,flpe}$= 24,00	$V_{y,Ed,flpe}$= 0,04

$V_{y,i}=(V_{y,Ed}*A_{y,i})/(A_{pfue}+A_{pfle})$

Bending moment Y

Plate	$I_{y,i}$ [cm4]	EQUIVALENT FORCES $M_{y,i}$ [kN*m]	Resultant force $M_{y,Ed,i}$ [kN*m]
	$I_{y,pw}$= 1333,33	2,69	**$M_{y,Ed,pw}$= 2,69**
	$I_{y,pfue}$= 3458,00	6,97	-
	$I_{y,pfle}$= 3458,00	6,97	-

$M_{y,i}=(M_{y,Ed}*I_{y,i})/(2*I_{pw}+I_{pfue}+I_{pfle})$

Bending moment Z

Plate	$I_{z,i}$ [cm4]	$M_{z,i}$ [kN*m]
	$I_{z,pfue}$= 1152,00	**$M_{z,Ed,pfue}$= 0,27**
	$I_{z,pfle}$= 1152,00	**$M_{z,Ed,pfle}$= 0,27**

$M_i=(M_{z,Ed}*I_{z,i})/(I_{z,pfue}+I_{z,pfle})$

BOLTS CONNECTING A SPLICE PLATE WITH THE COLUMN WEB

BOLT CAPACITIES

$F_{v,Rd}$ = 347,44 [kN] Shear bolt resistance in the unthreaded portion of a bolt $F_{v,Rd}= 0.6*f_{ub}*A_v*m/\gamma_{M2}$

Bolt bearing on the column web

Direction x

k_{1x} =	1,53		Coefficient for calculation of $F_{b,Rd}$	$k_{1x} = \min[2.8*(e_1/d_0)-1.7, 1.4*(p_1/d_0)-1.7, 2.5]$
$k_{1x} > 0.0$			1,53 > 0,00	verified
α_{bx} =	0,77		Coefficient for calculation of $F_{b,Rd}$	$\alpha_{bx}=\min[e_2/(3*d_0), p_2/(3*d_0)-0.25, f_{ub}/f_u, 1]$
$\alpha_{bx} > 0.0$			0,77 > 0,00	verified
$F_{b,Rd1x}$ =	83,09	[kN]	Bearing resistance of a single bolt	$F_{b,Rd1x}=k_{1x}*\alpha_{bx}*f_u*d*\sum t_i/\gamma_{M2}$

Direction z

k_{1z} =	2,50		Coefficient for calculation of $F_{b,Rd}$	$k_{1z}=\min[2.8*(e_2/d_0)-1.7, 1.4*(p_2/d_0)-1.7, 2.5]$
$k_{1z} > 0.0$			2,50 > 0,00	verified
α_{bz} =	0,52		Coefficient for calculation of $F_{b,Rd}$	$\alpha_{bz}=\min[e_1/(3*d_0), p_1/(3*d_0)-0.25, f_{ub}/f_u, 1]$
$\alpha_{bz} > 0.0$			0,52 > 0,00	verified
$F_{b,Rd1z}$ =	91,59	[kN]	Bearing resistance of a single bolt	$F_{b,Rd1z}=k_{1z}*\alpha_{bz}*f_u*d*\sum t_i/\gamma_{M2}$

Bolt bearing on the plate

Direction x

k_{1x} =	1,53		Coefficient for calculation of $F_{b,Rd}$	$k_{1x}=\min[2.8*(e_1/d_0)-1.7,\ 1.4*(p_1/d_0)-1.7,\ 2.5]$
$k_{1x} > 0.0$			1,53 > 0,00	verified
α_{bx} =	0,77		Coefficient for calculation of $F_{b,Rd}$	$\alpha_{bx}=\min[e_2/(3*d_0),\ p_2/(3*d_0)-0.25,\ f_{ub}/f_u,\ 1]$
$\alpha_{bx} > 0.0$			0,77 > 0,00	verified
$F_{b,Rd2x}$ =	221,56	[kN]	Bearing resistance of a single bolt	$F_{b,Rd2x}=k_{1x}*\alpha_{bx}*f_u*d*\sum t_i/\gamma_{M2}$

Direction z

k_{1z} =	2,50		Coefficient for calculation of $F_{b,Rd}$	$k_{1z}=\min[2.8*(e_2/d_0)-1.7,\ 1.4*(p_2/d_0)-1.7,\ 2.5]$
$k_{1z} > 0.0$			2,50 > 0,00	verified
α_{bz} =	0,52		Coefficient for calculation of $F_{b,Rd}$	$\alpha_{bz}=\min[e_1/(3*d_0),\ p_1/(3*d_0)-0.25,\ f_{ub}/f_u,\ 1]$
$\alpha_{bz} > 0.0$			0,52 > 0,00	verified
$F_{b,Rd2z}$ =	244,25	[kN]	Bearing resistance of a single bolt	$F_{b,Rd2z}=k_{1z}*\alpha_{bz}*f_u*d*\sum t_i/\gamma_{M2}$

ULTIMATE LIMIT STATE

Bolt shear

e_0 =	140	[mm]	Shear force eccentricity relative to the center of gravity of a bolt group	$e_0 = e_{2b}+0.5*(s_1+(c-1)*p_2)$
M_y =	6,61	[kN*m]	Real bending moment	$M_y=M_{y,Ed,pw}+V_{z,Ed,pw}*e_0$
$F_{x,N}$ =	30,24	[kN]	Component force in a bolt due to influence of the longitudinal force on the x direction	$F_{x,N}=\lvert N_{Ed,pw}\rvert/n_b$
$F_{z,Vz}$ =	4,67	[kN]	Component force in a bolt due to influence of the shear force Vz on the z direction	$F_{z,Vz}=\lvert V_{z,Ed,pw}\rvert/n_b$
$F_{x,My}$ =	6,39	[kN]	Component force in a bolt due to influence of the moment My on the x direction	$F_{x,My}=\lvert M_y\rvert*z_i/\sum(x_i^2+z_i^2)$
$F_{z,My}$ =	17,05	[kN]	Component force in a bolt due to influence of the moment My on the z direction	$F_{z,My}=\lvert M_y\rvert*x_i/\sum(x_i^2+z_i^2)$
$F_{x,Ed}$ =	36,63	[kN]	Design total force in a bolt on the direction x	$F_{x,Ed} = F_{x,N}+F_{x,My}$
$F_{z,Ed}$ =	21,72	[kN]	Design total force in a bolt on the direction z	$F_{z,Ed} = F_{z,Vz}+F_{z,My}$
F_{Ed} =	42,59	[kN]	Resultant shear force in a bolt	$F_{Ed} = \sqrt{(F_{x,Ed}^2 + F_{z,Ed}^2)}$
$F_{Rd,x}$ =	83,09	[kN]	Effective design capacity of a bolt on the direction x	$F_{Rdx}=\min(F_{bRd1,x},\ F_{bRd2,x})$
$F_{Rd,z}$ =	91,59	[kN]	Effective design capacity of a bolt on the direction z	$F_{Rdz}=\min(F_{bRd1,z},\ F_{bRd2,z})$

$\lvert F_{x,Ed}\rvert \le F_{Rd,x}$	|36,63| < 83,09	verified	(0,44)
$\lvert F_{z,Ed}\rvert \le F_{Rd,z}$	|21,72| < 91,59	verified	(0,24)
$F_{Ed} \le F_{v,Rd}$	42,59 < 347,44	verified	(0,12)

BOLTS CONNECTING A FLANGE PLATE WITH THE COLUMN RIGHT FLANGE

BOLT CAPACITIES

$F_{v,Rd}$ =	173,72	[kN]	Shear resistance of the shank of a single bolt	$F_{v,Rd}= 0.6*f_{ub}*A_v*m/\gamma_{M2}$

Bolt bearing on the column flange

Direction x

k_{1x} =	2,50		Coefficient for calculation of $F_{b,Rd}$	$k_{1x}=\min[2.8*(e_2/d_0)-1.7,\ 2.5]$
$k_{1x} > 0.0$			2,50 > 0,00	verified
α_{bx} =	0,77		Coefficient for calculation of $F_{b,Rd}$	$\alpha_{bx}=\min[e_1/(3*d_0),\ p_1/(3*d_0)-0.25,\ f_{ub}/f_u,\ 1]$
$\alpha_{bx} > 0.0$			0,77 > 0,00	verified
$F_{b,Rd1x}$ =	217,11	[kN]	Bearing resistance of a single bolt	$F_{b,Rd1x}=k_{1x}*\alpha_{bx}*f_u*d*\sum t_i/\gamma_{M2}$

Direction y

k_{1y} =	2,50		Coefficient for calculation of $F_{b,Rd}$	$k_{1y} = \min[2.8*(e_1/d_0)-1.7,\ 1.4*(p_1/d_0)-1.7,\ 2.5]$
$k_{1y} > 0.0$			2,50 > 0,00	verified
α_{by} =	1,00		Coefficient for calculation of $F_{b,Rd}$	$\alpha_{by}=\min[e_2/(3*d_0),\ f_{ub}/f_u,\ 1]$
$\alpha_{by} > 0.0$			1,00 > 0,00	verified
$F_{b,Rd1y}$ =	282,24	[kN]	Bearing resistance of a single bolt	$F_{b,Rd1y}=k_{1y}*\alpha_{by}*f_u*d*\sum t_i/\gamma_{M2}$

Bolt bearing on the plate

Direction x

k_{1x} =	2,50		Coefficient for calculation of $F_{b,Rd}$	$k_{1x}=\min[2.8*(e_2/d_0)-1.7,\ 2.5]$
$k_{1x} > 0.0$			2,50 > 0,00	verified
α_{bx} =	0,77		Coefficient for calculation of $F_{b,Rd}$	$\alpha_{bx}=\min[e_1/(3*d_0),\ p_1/(3*d_0)-0.25,\ f_{ub}/f_u,\ 1]$
$\alpha_{bx} > 0.0$			0,77 > 0,00	verified
$F_{b,Rd2x}$ =	180,92	[kN]	Bearing resistance of a single bolt	$F_{b,Rd2x}=k_{1x}*\alpha_{bx}*f_u*d*\sum t_i/\gamma_{M2}$

Direction y

k_{1y} =	2,50		Coefficient for calculation of $F_{b,Rd}$	k_{1y}=min[2.8*(e_1/d_0)-1.7, 1.4*(p_1/d_0)-1.7, 2.5]
k_{1y} > 0.0			2,50 > 0,00	verified
α_{by} =	1,00		Coefficient for calculation of $F_{b,Rd}$	α_{by}=min[e_2/(3*d_0), f_{ub}/f_u, 1]
α_{by} > 0.0			1,00 > 0,00	verified
$F_{b,Rd2y}$ =	235,20	[kN]	Bearing resistance of a single bolt	$F_{b,Rd2y}=k_{1y}*\alpha_{by}*f_u*d*\sum t_i/\gamma_{M2}$

ULTIMATE LIMIT STATE

Bolt shear

e_0 =	140	[mm]	Shear force eccentricity relative to the center of gravity of a bolt group	$e_0 = e_{1b}+0.5*(r-1)*p_1$
M_z =	0,27	[kN*m]	Real bending moment	$M_z=M_{z,Ed,pf}+V_{y,Ed,pf}*e_0$
$F_{x,N}$ =	28,24	[kN]	Component force in a bolt due to influence of the longitudinal force on the x direction	$F_{x,N}=\|N_{Ed,pf}\|/n_b$
$F_{y,Vy}$ =	0,01	[kN]	Component force in a bolt due to influence of the shear force Vy on the y direction	$F_{y,Vy}=\|V_{y,Ed,pf}\|/n_b$
$F_{x,Mz}$ =	0,26	[kN]	Component force in a bolt due to influence of the moment Mz on the x direction	$F_{x,Mz}=\|M_z\|*y_i/\sum(x_i^2+y_i^2)$
$F_{y,Mz}$ =	0,70	[kN]	Component force in a bolt due to influence of the moment Mz on the y direction	$F_{y,Mz}= \|M_z\|*x_i/\sum(x_i^2+y_i^2)$
$F_{x,Ed}$ =	28,50	[kN]	Design total force in a bolt on the direction x	$F_{x,Ed} = F_{x,N}+F_{x,Mz}$
$F_{y,Ed}$ =	0,71	[kN]	Design total force in a bolt on the direction y	$F_{y,Mz} = F_{y,Vy}+F_{y,Mz}$
F_{Ed} =	28,51	[kN]	Resultant shear force in a bolt	$F_{Ed} = \sqrt{(F_{x,Ed}^2 + F_{y,Ed}^2)}$
$F_{x,Rd}$ =	180,92	[kN]	Effective design capacity of a bolt on the direction x	$F_{x,Rd}$=min($F_{x,bRd1}$, $F_{x,bRd2}$)
$F_{y,Rd}$ =	235,20	[kN]	Effective design capacity of a bolt on the direction y	$F_{y,Rd}$=min($F_{y,bRd1}$, $F_{y,bRd2}$)
$\|F_{x,Ed}\| \le F_{x,Rd}$			|28,50| < 180,92	verified (0,16)
$\|F_{y,Ed}\| \le F_{y,Rd}$			|0,71| < 235,20	verified (0,00)
$F_{Ed} \le F_{v,Rd}$			28,51 < 173,72	verified (0,16)

BOLTS CONNECTING A FLANGE PLATE WITH THE COLUMN LEFT FLANGE

BOLT CAPACITIES

$F_{v,Rd}$ =	173,72	[kN]	Shear resistance of the shank of a single bolt	$F_{v,Rd}= 0.6*f_{ub}*A_v*m/\gamma_{M2}$

Bolt bearing on the column flange

Direction x

k_{1x} =	2,50		Coefficient for calculation of $F_{b,Rd}$	k_{1x}=min[2.8*(e_2/d_0)-1.7, 2.5]
k_{1x} > 0.0			2,50 > 0,00	verified
α_{bx} =	0,77		Coefficient for calculation of $F_{b,Rd}$	α_{bx}=min[e_1/(3*d_0), p_1/(3*d_0)-0.25, f_{ub}/f_u, 1]
α_{bx} > 0.0			0,77 > 0,00	verified
$F_{b,Rd1x}$ =	217,11	[kN]	Bearing resistance of a single bolt	$F_{b,Rd1x}=k_{1x}*\alpha_{bx}*f_u*d*\sum t_i/\gamma_{M2}$

Direction y

k_{1y} =	2,50		Coefficient for calculation of $F_{b,Rd}$	k_{1y} = min[2.8*(e_1/d_0)-1.7, 1.4*(p_1/d_0)-1.7, 2.5]
k_{1y} > 0.0			2,50 > 0,00	verified
α_{by} =	1,00		Coefficient for calculation of $F_{b,Rd}$	α_{by}=min[e_2/(3*d_0), f_{ub}/f_u, 1]
α_{by} > 0.0			1,00 > 0,00	verified
$F_{b,Rd1y}$ =	282,24	[kN]	Bearing resistance of a single bolt	$F_{b,Rd1y}=k_{1y}*\alpha_{by}*f_u*d*\sum t_i/\gamma_{M2}$

Bolt bearing on the plate

Direction x

k_{1x} =	2,50		Coefficient for calculation of $F_{b,Rd}$	k_{1x}=min[2.8*(e_2/d_0)-1.7, 2.5]
k_{1x} > 0.0			2,50 > 0,00	verified
α_{bx} =	0,77		Coefficient for calculation of $F_{b,Rd}$	α_{bx}=min[e_1/(3*d_0), p_1/(3*d_0)-0.25, f_{ub}/f_u, 1]
α_{bx} > 0.0			0,77 > 0,00	verified
$F_{b,Rd2x}$ =	180,92	[kN]	Bearing resistance of a single bolt	$F_{b,Rd2x}=k_{1x}*\alpha_{bx}*f_u*d*\sum t_i/\gamma_{M2}$

Direction y

k_{1y} =	2,50		Coefficient for calculation of $F_{b,Rd}$	k_{1y}=min[2.8*(e_1/d_0)-1.7, 1.4*(p_1/d_0)-1.7, 2.5]
k_{1y} > 0.0			2,50 > 0,00	verified
α_{by} =	1,00		Coefficient for calculation of $F_{b,Rd}$	α_{by}=min[e_2/(3*d_0), f_{ub}/f_u, 1]
α_{by} > 0.0			1,00 > 0,00	verified
$F_{b,Rd2y}$ =	235,20	[kN]	Bearing resistance of a single bolt	$F_{b,Rd2y}=k_{1y}*\alpha_{by}*f_u*d*\sum t_i/\gamma_{M2}$

ULTIMATE LIMIT STATE

Bolt shear

e_0 =	140	[mm]	Shear force eccentricity relative to the center of gravity of a bolt group	$e_0 = e_{1b}+0.5*(r-1)*p_1$
M_z =	0,27	[kN*m]	Real bending moment	$M_z=M_{z,Ed,pf}+V_{y,Ed,pf}*e_0$
$F_{x,N}$ =	8,05	[kN]	Component force in a bolt due to influence of the longitudinal force on the x direction	$F_{x,N}=\|N_{Ed,pf}\|/n_b$
$F_{y,Vy}$ =	0,01	[kN]	Component force in a bolt due to influence of the shear force Vy on the y direction	$F_{y,Vy}=\|V_{y,Ed,pf}\|/n_b$
$F_{x,Mz}$ =	0,26	[kN]	Component force in a bolt due to influence of the moment Mz on the x direction	$F_{x,Mz}=\|M_z\|*y_i/\sum(x_i^2+y_i^2)$
$F_{y,Mz}$ =	0,70	[kN]	Component force in a bolt due to influence of the moment Mz on the y direction	$F_{y,Mz}= \|M_z\|*x_i/\sum(x_i^2+y_i^2)$
$F_{x,Ed}$ =	8,31	[kN]	Design total force in a bolt on the direction x	$F_{x,Ed} = F_{x,N}+F_{x,Mz}$
$F_{y,Ed}$ =	0,71	[kN]	Design total force in a bolt on the direction y	$F_{y,Mz} = F_{y,Vy}+F_{y,Mz}$
F_{Ed} =	8,34	[kN]	Resultant shear force in a bolt	$F_{Ed} = \sqrt{(F_{x,Ed}^2 + F_{y,Ed}^2)}$
$F_{x,Rd}$ =	180,92	[kN]	Effective design capacity of a bolt on the direction x	$F_{x,Rd}=\min(F_{x,bRd1}, F_{x,bRd2})$
$F_{y,Rd}$ =	235,20	[kN]	Effective design capacity of a bolt on the direction y	$F_{y,Rd}=\min(F_{y,bRd1}, F_{y,bRd2})$

$\|F_{x,Ed}\| \le F_{x,Rd}$	|8,31| < 180,92	verified	(0,05)
$\|F_{y,Ed}\| \le F_{y,Rd}$	|0,71| < 235,20	verified	(0,00)
$F_{Ed} \le F_{v,Rd}$	8,34 < 173,72	verified	(0,05)

VERIFICATION OF THE SECTION DUE TO BLOCK TEARING - [3.10]

COLUMN

Nr	Model	A_{nv} [cm2]	A_{nt} [cm2]	V_0 [kN]	$V_{eff,Rd}$ [kN]	$\|V_0\|/V_{eff,Rd}$	Status
1		7,95	11,62	28,00 (*1)	390,79 (*)	0,07	verified
2		11,62	44,67	181,44 (*2)	1989,16 (**)	0,09	verified
3		11,62	44,67	181,44 (*2)	1989,16 (**)	0,09	verified
4		23,25	2,55	181,44 (*2)	576,49 (**)	0,31	verified
5		18,60	9,24	169,45 (*3)	1486,86 (***)	0,11	verified
6		18,60	9,24	48,28 (*4)	1486,86 (***)	0,03	verified

(*1) $V_0 = V_{zEd1}$
(*2) $V_0 = N_{wEd}$
(*3) $V_0 = N_{fuEd}$
(*4) $V_0 = N_{flEd}$
(*) $V_{effRd} = 0.5*f_u*A_{nt}/\gamma_{M2} + (1/\sqrt{3})*f_y*A_{nv}/\gamma_{M0}$
(**) $V_{effRd} = f_u*A_{nt}/\gamma_{M2} + (1/\sqrt{3})*f_y*A_{nv}/\gamma_{M0}$
(***) $V_{effRd} = 2*[f_u*A_{nt}/\gamma_{M2} + (1/\sqrt{3})*f_y*A_{nv}/\gamma_{M0}]$

SPLICE PLATE

Nr	Model	A_{nv} [cm2]	A_{nt} [cm2]	V_0 [kN]	$V_{eff,Rd}$ [kN]	$\|V_0\|/V_{eff,Rd}$	Status
1		9,10	15,50	14,00 (*1)	490,31 (*)	0,03	verified
2		15,50	9,10	90,72 (*2)	674,41 (**)	0,13	verified
3		15,50	9,10	90,72 (*2)	674,41 (**)	0,13	verified
4		31,00	3,40	90,72 (*2)	768,65 (**)	0,12	verified

(*1) $V_0 = V_{zEd1}$
(*2) $V_0 = N_{wEd}$
(*) $V_{effRd} = 0.5*f_u*A_{nt}/\gamma_{M2} + (1/\sqrt{3})*f_y*A_{nv}/\gamma_{M0}$
(**) $V_{effRd} = f_u*A_{nt}/\gamma_{M2} + (1/\sqrt{3})*f_y*A_{nv}/\gamma_{M0}$

RIGHT EXTERNAL PLATE

Nr	Model	A_{nv} [cm2]	A_{nt} [cm2]	V_0 [kN]	$V_{eff,Rd}$ [kN]	$\lvert V_0\rvert/V_{eff,Rd}$	Status
1		2,10	15,50	0,04 (*1)	346,84 (*)	0,00	verified
2		15,50	11,10	166,92 (*2)	752,81 (**)	0,22	verified
3		31,00	3,40	166,92 (*2)	768,65 (**)	0,22	verified

(*1) $V_0 = 0.5*V_{yEd1}$
(*2) $V_0 = N_{fueEd}$
(*) $V_{effRd} = 0.5*f_u*A_{nt}/\gamma_{M2} + (1/\sqrt{3})*f_y*A_{nv}/\gamma_{M0}$
(**) $V_{effRd} = f_u*A_{nt}/\gamma_{M2} + (1/\sqrt{3})*f_y*A_{nv}/\gamma_{M0}$

LEFT EXTERNAL PLATE

Nr	Model	A_{nv} [cm2]	A_{nt} [cm2]	V_0 [kN]	$V_{eff,Rd}$ [kN]	$\lvert V_0\rvert/V_{eff,Rd}$	Status
1		2,10	15,50	0,04 (*1)	346,84 (*)	0,00	verified
2		15,50	11,10	50,81 (*2)	752,81 (**)	0,07	verified
3		31,00	3,40	50,81 (*2)	768,65 (**)	0,07	verified

(*1) $V_0 = 0.5*V_{yEd1}$
(*2) $V_0 = N_{fleEd}$
(*) $V_{effRd} = 0.5*f_u*A_{nt}/\gamma_{M2} + (1/\sqrt{3})*f_y*A_{nv}/\gamma_{M0}$
(**) $V_{effRd} = f_u*A_{nt}/\gamma_{M2} + (1/\sqrt{3})*f_y*A_{nv}/\gamma_{M0}$

VERIFICATION OF SECTIONS WEAKENED BY OPENINGS - [5.4]

COLUMN

A_t =	30,69	[cm²]	Area of tension zone of the gross section		
$A_{t,net}$ =	20,55	[cm²]	Net area of the section in tension		
$0.9*(A_{t,net}/A_t) \le (f_y*\gamma_{M2})/(f_u*\gamma_{M0})$			0,60 < 0,91	verified	
W =	675,06	[cm³]	Elastic section modulus		
W_{net} =	675,06	[cm³]	Elastic section modulus		
$M_{c,Rdnet}$ =	239,65	[kN*m]	Design resistance of the section for bending		$M_{c,Rdnet} = W_{net}*f_{yp}/\gamma_{M0}$
$\lvert M_0\rvert \le M_{c,Rdnet}$			|16,62| < 239,65	verified	(0,07)
A_v =	17,25	[cm²]	Effective section area for shear		$A_v = h_p*t_p$
$A_{v,net}$ =	13,35	[cm²]	Net area of a section effective for shear		$A_{vnet}=A_v-n_v*d_0*t_p$
$A_{v,net} \ge (f_{yp}/f_{up})*A_v$			13,35 > 12,50	verified	
$V_{pl,Rd}$ =	353,55	[kN]	Design plastic resistance for shear		$V_{pl,Rd}=(A_v*f_{yp})/(\sqrt{3}*\gamma_{M0})$
$\lvert V_0\rvert \le V_{pl,Rd}$			|28,00| < 353,55	verified	(0,08)

SPLICE PLATE

A_t =	19,15	[cm²]	Area of tension zone of the gross section		
$A_{t,net}$ =	13,95	[cm²]	Net area of the section in tension		
$0.9*(A_{t,net}/A_t) \le (f_y*\gamma_{M2})/(f_u*\gamma_{M0})$			0,66 < 0,91	verified	
W =	66,67	[cm³]	Elastic section modulus		
W_{net} =	61,69	[cm³]	Elastic section modulus		
$M_{c,Rdnet}$ =	21,90	[kN*m]	Design resistance of the section for bending		$M_{c,Rdnet} = W_{net}*f_{yp}/\gamma_{M0}$
$\lvert M_0\rvert \le M_{c,Rdnet}$			|3,30| < 21,90	verified	(0,15)
A_v =	20,00	[cm²]	Effective section area for shear		$A_v = h_p*t_p$
$A_{v,net}$ =	14,80	[cm²]	Net area of a section effective for shear		$A_{vnet}=A_v-n_v*d_0*t_p$
$A_{v,net} \ge (f_{yp}/f_{up})*A_v$			14,80 > 14,49	verified	
$V_{pl,Rd}$ =	409,92	[kN]	Design plastic resistance for shear		$V_{pl,Rd}=(A_v*f_{yp})/(\sqrt{3}*\gamma_{M0})$

$\lvert V_0 \rvert \le V_{pl,Rd}$			$\lvert 14,00 \rvert < 409,92$	verified	(0,03)

RIGHT EXTERNAL PLATE

A_t =	24,00	[cm²]	Area of tension zone of the gross section		
$A_{t,net}$ =	18,80	[cm²]	Net area of the section in tension		
$0.9*(A_{t,net}/A_t) \le (f_y*\gamma_{M2})/(f_u*\gamma_{M0})$			$0,70 < 0,91$	verified	
W =	96,00	[cm³]	Elastic section modulus		
W_{net} =	91,86	[cm³]	Elastic section modulus		
$M_{c,Rdnet}$ =	32,61	[kN*m]	Design resistance of the section for bending		$M_{c,Rdnet} = W_{net}*f_{yp}/\gamma_{M0}$
$\lvert M_0 \rvert \le M_{c,Rdnet}$			$\lvert 0,27 \rvert < 32,61$	verified	(0,01)
A_v =	24,00	[cm²]	Effective section area for shear		$A_v = h_p*t_p$
$A_{v,net}$ =	18,80	[cm²]	Net area of a section effective for shear		$A_{vnet}=A_v-n_v*d_0*t_p$
$A_{v,net} \ge (f_{yp}/f_{up})*A_v$			$18,80 > 17,39$	verified	
$V_{pl,Rd}$ =	491,90	[kN]	Design plastic resistance for shear		$V_{pl,Rd}=(A_v*f_{yp})/(\sqrt{3}*\gamma_{M0})$
$\lvert V_0 \rvert \le V_{pl,Rd}$			$\lvert 0,04 \rvert < 491,90$	verified	(0,00)

LEFT EXTERNAL PLATE

A_t =	24,00	[cm²]	Area of tension zone of the gross section		
$A_{t,net}$ =	18,80	[cm²]	Net area of the section in tension		
$0.9*(A_{t,net}/A_t) \le (f_y*\gamma_{M2})/(f_u*\gamma_{M0})$			$0,70 < 0,91$	verified	
W =	96,00	[cm³]	Elastic section modulus		
W_{net} =	91,86	[cm³]	Elastic section modulus		
$M_{c,Rdnet}$ =	32,61	[kN*m]	Design resistance of the section for bending		$M_{c,Rdnet} = W_{net}*f_{yp}/\gamma_{M0}$
$\lvert M_0 \rvert \le M_{c,Rdnet}$			$\lvert 0,27 \rvert < 32,61$	verified	(0,01)
A_v =	24,00	[cm²]	Effective section area for shear		$A_v = h_p*t_p$
$A_{v,net}$ =	18,80	[cm²]	Net area of a section effective for shear		$A_{vnet}=A_v-n_v*d_0*t_p$
$A_{v,net} \ge (f_{yp}/f_{up})*A_v$			$18,80 > 17,39$	verified	
$V_{pl,Rd}$ =	491,90	[kN]	Design plastic resistance for shear		$V_{pl,Rd}=(A_v*f_{yp})/(\sqrt{3}*\gamma_{M0})$
$\lvert V_0 \rvert \le V_{pl,Rd}$			$\lvert 0,04 \rvert < 491,90$	verified	(0,00)

REMARKS

Distance between bolt on the left flange and edge of lower column web is too small	26 [mm] < 31 [mm]
Distance between bolt on the right flange and edge of lower column web is too small	26 [mm] < 31 [mm]
Distance between bolt on the left flange and edge of upper column web is too small	26 [mm] < 31 [mm]
Distance between bolt on the right flange and edge of upper column web is too small	26 [mm] < 31 [mm]

Connection conforms to the code Ratio 0,44

Appendix 8. Gusset plate connection calculation

SWECO Sweco Rakennetekniikka Oy, Rautatienkatu 33, 90100 OULU		Rakennelaskelma, tulokset Tekijä: Juha Seppälä Päiväys: 29.11.2017	s 1 (3)
Rakennuskohde: Diplomityön case-kohde	Työ no: 2	Sisältö: Sideliitos	Sijainti: 2

T15 HFRHS, CFCHS putkipalkin sideliitos: tyyppi B: SFS-EN-1993 Versio 1.5

SKOL Toteutettu SKOL Eurocode-laskentapohjahankkeessa 2008-2011

Poikkileikkausluokat 1, 2 ja 3. Mitoitus vedolle ja puristukselle

Lähtötiedot

N_{Ed} = - 123 kN

Ruuvit		
Ruuvi		M20
Halkisija	d	20
Reiän koko	mm	22
Määrä	kpl	2
Ruuvirivit	n	2
Ruuvisarakkeet	m	1
Bruttoala	mm^2	314,16
Jännityspoikkipinta-ala	mm^2	245,00
Lujuusluokka		8.8
f_{ub}	N/mm^2	800
f_{yb}	N/mm^2	640
α_v		0,6

Teräs EN 10025-2 tai vastaava					
Putkipalkki		S355			
$f_{y,p}$	N/mm^2	355			
$f_{u,p}$	N/mm^2	510			
Levyosat		S355			
$f_{y,l}$	N/mm^2	355			
$f_{u,l}$	N/mm^2	510			
Putkipalkin koko		120	x	120	x 4
(Pyöreällä b = D)				b (D)	x t_2
Levy 1 paksuus	t_1	15			
Levyn leveys	b_1	140	suos.b+20		
Nurjahduspituus	L_{0y}	65			
Upotuspituus	L_1	180			
Poikkileikkausluokka		3			

Hitsi A		
Hitsi A: a-mitta	mm	3
Hitsin palkopituus	= L_1	180

Reunaetäisyydet		
Päätyetäisyys	e_1	50
reunaetäisyys	e_2	40
Keskiöväli	p_1	
Keskiöväli	p_2	60

Kuva 1. Ruuvimäärä ja sijainti lähtötietoarvojen mukaisesti. (Voi olla eri kuin kuvassa)

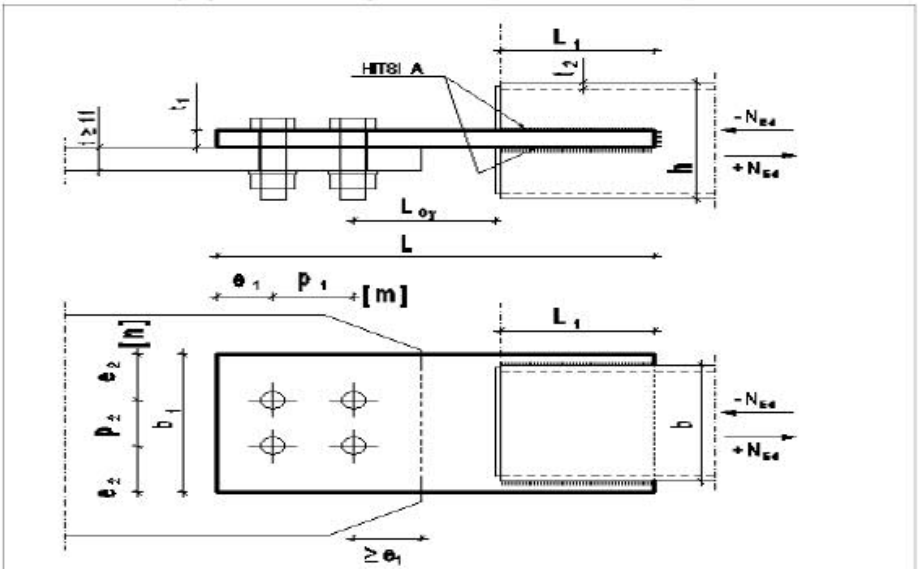

SWECO Sweco Rakennetekniikka Oy, Rautatienkatu 33, 90100 OULU		Rakennelaskelma, tulokset Tekijä: Juha Seppälä Päiväys: 29.11.2017	s 2 (3)
Rakennuskohde: Diplomityön case-kohde	Työ no: 2	Sisältö: Sideliitos	Sijainti: 2

T15 HFRHS, CFCHS putkipalkin sideliitos: tyyppi B: SFS-EN-1993

Ruuvien leikkauskestävyys $F_{v,Rd}$

$F_{v,Rd} = (\alpha_v * f_{ub} * A_s) / \gamma_{M2}$ 2 kpl M20 8.8

Yhteensä Kierre leikkaustasossa: ei

$F_{v,Rd}$ = 241,3 ≥ V_{Ed} = 123,0 kN OK 51 %

Ruuvin leikkausvoiman mitoitusarvo ruuvia kohti, $F_{v,Ed}$

$F_{v,Ed}$ = 61,5 kN/ruuvi

Reunapuristuskestävyys $F_{b,Rd}$

$F_{b,Rd} = (k_1 * a_b * f_{u,l} * d * t_1) / \gamma_{M2}$

minimiarvon mukaan

$F_{b,Rd}$ = 183,6 kN / ruuvi ≥ $F_{v,Ed}$ = 61,5 kN / ruuvi OK 33 %

Kestävyys Ulkoinen voima

Palamurtuminen $V_{eff,1,Rd}$

$V_{eff,1,Rd} = f_{u\,l} * A_{n\,t} / \gamma_{M2} + (1/\sqrt{3}) f_{y\,l} * A_{nv} / \gamma_{M0}$

Murtumistapa 1

$V_{eff,1,Rd}$ = 587,5 kN ≥ N_{Ed} = 123,0 kN OK 21 %

Murtumistapa 2

$V_{eff,1,Rd}$ = 472,4 kN ≥ N_{Ed} = 123,0 kN OK 26 %

Murtumistapa 3

$V_{eff,1,Rd}$ = 297,4 kN ≥ $F_{v,Ed}$ = 61,5 kN OK 21 %

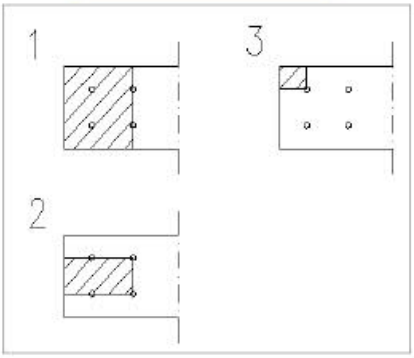

SWECO Sweco Rakennetekniikka Oy, Rautatienkatu 33, 90100 OULU	Rakennelaskelma, tulokset Tekijä: Juha Seppälä Päiväys: 29.11.2017	s 3 (3)
Rakennuskohde: Diplomityön case-kohde	Työ no: Sisältö: 2 Sideliitos	Sijainti: 2

T15 HFRHS, CFCHS putkipalkin sideliitos: tyyppi B: SFS-EN-1993

HITSI: Pienahitsin kestävyys on riitävä jos seuraava ehto on voimassa:

$[\delta_\perp^2+3(\tau_\perp^2+\tau_{||}^2)]^{0,5} \leq f_{u,I} / (\beta_w{}^*\gamma_{M2})$ HITSI: a = 3

Hitsin maksimi a-mitta sidottu putkipalkin seinämän kestävyyteen. a_{max} = 3,1

98,6 ≤ 453,3 N/mm^2 OK 22 %

Ruuvikiinnitysluokkien mukaiset ehdot

$F_{v,Ed} \leq F_{v,Rd}$ ja $F_{v,Ed} \leq Fb_{,Rd}$

Ruuvikiinnitysluokka A: REUNAPURISTUSTYPPINEN LIITOS

$F_{v,Ed}$ =	61,5	kN / ruuvi	≤	$F_{v,Rd}$ =	120,6	kN / ruuvi	OK	51 %
$F_{v,Ed}$ =	61,5	kN / ruuvi	≤	$F_{b,Rd}$ =	183,6	kN / ruuvi	OK	33 %

Ripalevyn kestävyys

$N_{u,Rd} = 0,9*A_1*f_{ul}/\gamma_{M2}$ = 771,1 ≥ N_{Ed} = 123,0 OK 16 %

$N_{pl,Rd} = A*f_y/\gamma_{M0}$ = 745,5 ≥ N_{Ed} = 123,0 OK 16 %

Nurjahdus | Nurjahdus huomioidaan

Puristettuna rakenteena y-y suhteen

$N_{Ed} / N_{b,Rd} \leq 1.0$

$N_{Ed}/N_{b,Rd}$ = 0,16 ≤ 1,0 OK 16 %

$N_{b,Rd}$=	746,8	kN Kapasiteetti	L_{0y} =	65	mm		
$\bar{\lambda}$ =	0,20	Muunnettu hoikkuus	Levy t_1 x b_1 =	15	x	140	
Φ =	0,52	Muuttuja					
χ =	1,00	Pienennystekijä					
α =	0,49	Epätarkkutekijä,nurjahduskäyrä C					

Appendix 9. Sandwich element details

		Contents of drawing Sketch of vertical joint Crimp connection Version 1	
Date 05.12.2017	Rev. date	Work nr.	Drawing nr. Sketch
Drawn by Juha Seppälä	Rev.		
	Building Master's thesis case project		File nr.

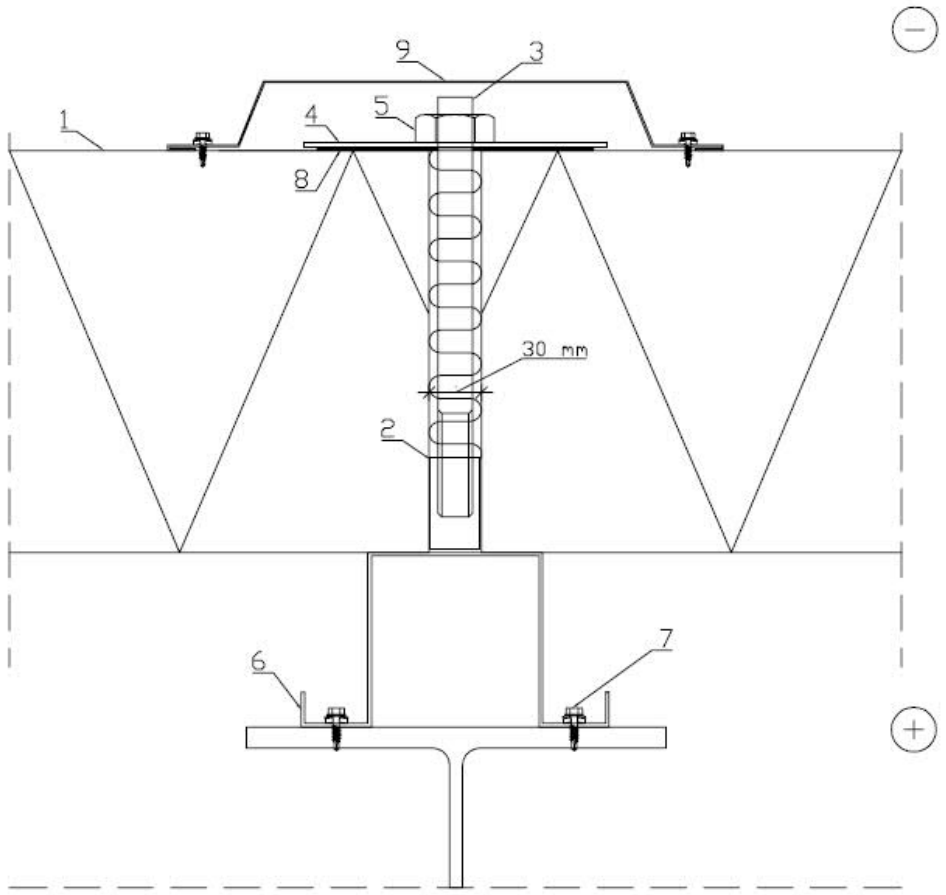

1. Sandwich-panel
2. Inside thread piece, M12
3. M12 threaded rod
4. Plate with bolt hole
5. Nut M12
6. H-section LP-H10020
7. Self-drilling screw
8. Sealing tape
9. Vertical joint flashing

		Contents of drawing Sketch of vertical joint Crimp connection Version 2	
Date 05.12.2017	Rev. date	Work nr.	Drawing nr. Sketch
Drawn by Juha Seppälä	Rev.		
	Building Master's thesis case project		File nr.

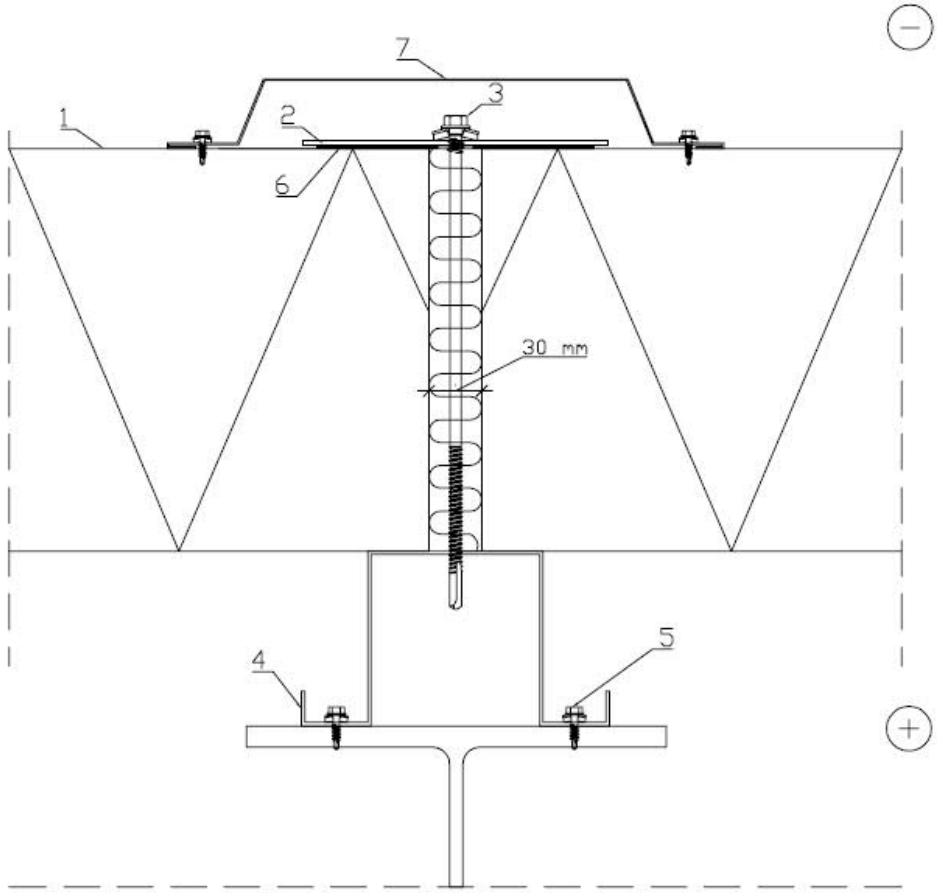

1. Sandwich-panel
2. Plate with hole
3. Self-drilling element screw
4. H-section LP-H10020
5. Self-drilling screw
6. Sealing tape
7. Vertical joint flashing

		Contents of drawing Sketch of vertical joint Crimp connection Version 3	
Date 05.12.2017	Rev. date	Work nr.	Drawing nr. Sketch
Drawn by Juha Seppälä	Rev.		
	Building Master's thesis case project		File nr.

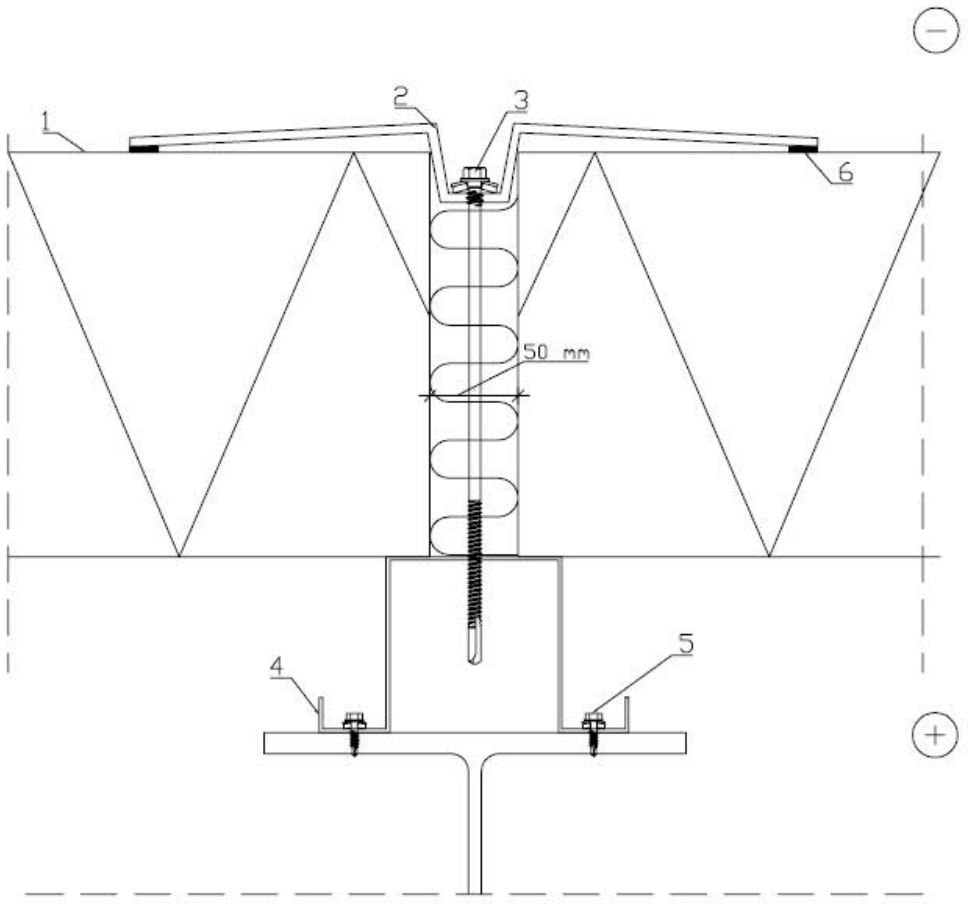

1. Sandwich-panel
2. Custom-made plate with hole
3. Self-drilling element screw
4. H-section LP-H10020
5. Self-drilling screw
6. Sealing strip

		Contents of drawing External corner	
Date 05.12.2017	Rev. date	Work nr.	Drawing nr. Sketch
Drawn by Juha Seppälä	Rev.		
	Building Master's thesis case project		File nr.

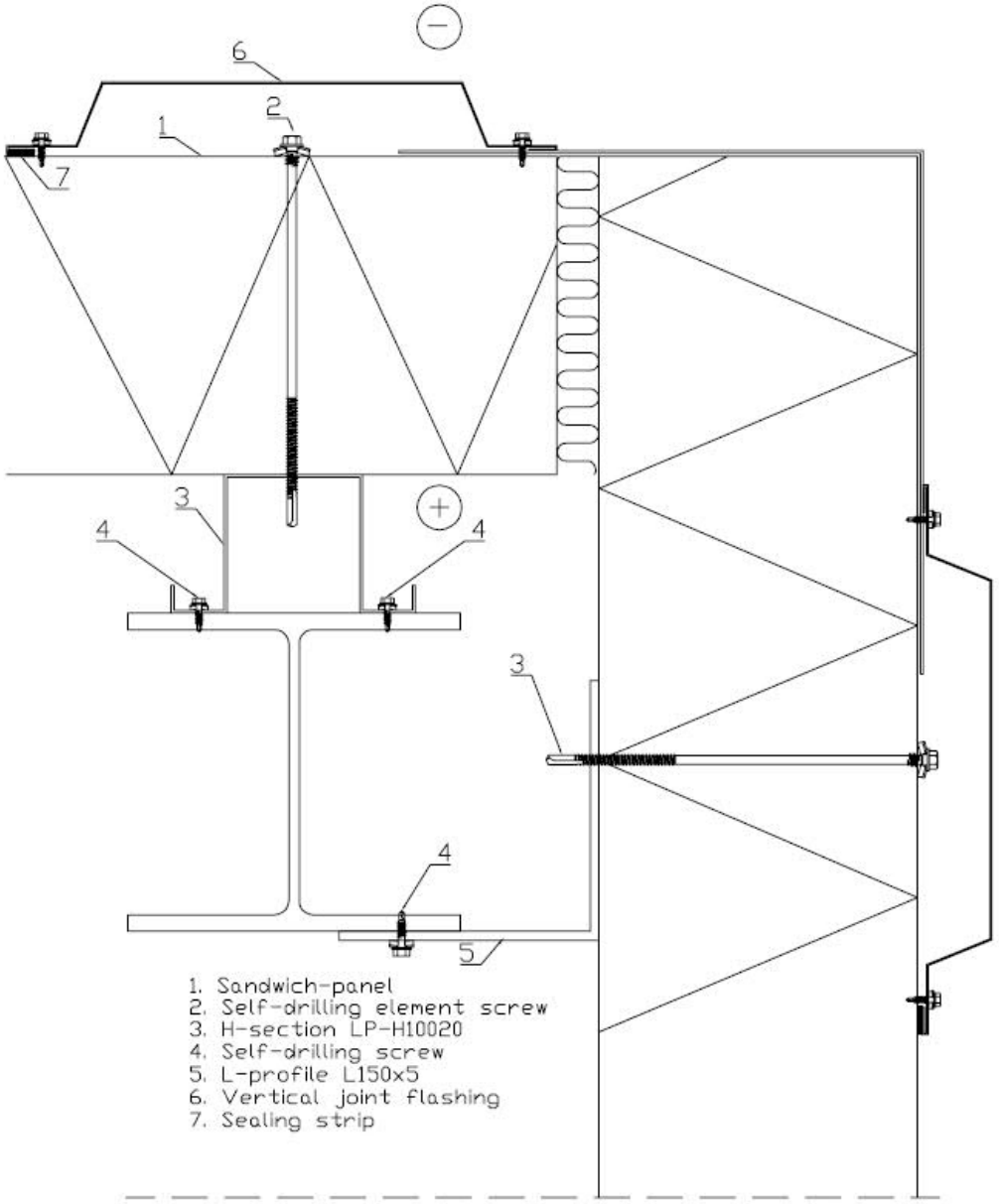

Appendix 10. Service life calculations

Teräskenteiden käyttöikämitoitus kerroinmenetelmällä

Tarkasteltava kohde

Tänne kirjoitetaan tarkastettavan kohteen tunnus

95 %
Valitse varmuustaso

Runkorakenteet
Valitse rakenne

	Käyttöikä	128	vuotta
RSLC	Vertailukäyttöikä	50	
A	Materiaalit	0,67	
B	Rakenneratkaisut	1,00	
C	Toteutus	1,00	
D	Käytöstä alheutuvat rasitukset	1,00	
G	Huollon taso	3,83	

Ohje

Valintojen tulostus

Rasitusluokka: C3 (kaupunki, teollisuus, rannikko, alhainen suola)

Materiaal

Materiaali ja paksuus: Ruiskumaalattu teräs (Epoksi + PUR, ulko) — Kerroin A1: 0,7

False

Pinnoitteen tummuusaste: Ei määritetty — Kerroin A2: 1

Korroosio-olosuhteet: Alhainen / Keskimääräinen / Korkea — Kerroin A1R: 0

Pinnan laatu: 2R / 2B / 2K / 2J / 2G — Kerroin A2R: 0

Pinnan laatu/viimeistelytila (runkorakenne): Peitattu / Hiottu / Valmiustilainen — Kerroin A2 Runko: 0

OK | Peruuta | Tulosta

Kylmäsillat

Sisäverhouksen pintalämpötilan maksimipoikkeama rungon kohdalla
dTp = Tp, runko - Tp, muu

Rakenteen riski muodostaa kylmäsiltoja: dTp < 1 astetta C — Kerroin B1: 1

Rakenne osittain ulkoilmassa: Suojattuna sateelta ja auringon säteilyltä — Kerroin B2: 1

B = B1 * B2

OK | Peruuta | Tulosta

Kuljetus ja varastointi	Ohjeiden mukainen	**Kerroin C1** 1
Varastointilämpötila ja -kosteus	Kuiva, lämmin (> 10 °C) ja tuuletettu tila	**Kerroin C2** 1
Leikkausmenetelmä	Ohjeiden mukaiset menetelmät ja työkalut	**Kerroin C3** 1
Leikkausreunojen ja liitosten suojaus	Ohjeiden mukainen	**Kerroin C4** 1
Pintojen puhdistus porausjätteistä yms.	Huolellisesti suoritettu	**Kerroin C5** 1

OK Peruuta Tulosta

Käytöstä aiheuttavat rasitukset	Suojassa em. rasituksilta	**Kerroin D** 1

OK Peruuta Tulosta

Kunnon tarkastukset ja huolto

		Kerroin G1
Silmämääräiset tarkastukset ja rakenteiden kunnon tarkastukset	Sännöllisesti	1

Säännöllisen huollon edellyttämät toimenpiteet (vuosittain):

- tuuletusraon avoimuus (istutusten kasvaminen kiinni verhoiluun)
- seinän vierustojen siivoaminen
- pinnoitevaurioiden korjaus (paikkamaalaukset)
- ruostevalumien, lian ja roskien puhdistaminen pinnoilta
- vedenpoistojen, räystäskourujen ja syöksytorvien tarkastus ja puhdistus
- vuotokohtien paikantaminen ja korjaus

Säännöllisen huollon edellyttämät toimenpiteet (5-10 vuoden välein):

- julkisivun ja katerakenteiden avaus sekä taustarakenteiden tarkastus
- kiinnikkeiden kiristys ja tarvittaessa uusiminen
- liitosten ja kiinnityskohtien kunto ja korjaustarpeen arviointi
- huoltomaalauksen tarpeellisuuden arviointi

Uusintamaalaus

		Kerroin G2
Uusintamaalaus	Ruiskumaalattu teräs (epoksipohja + uretaanipinta, ulko) Puhdistus ja maalaus kaksi kertaa	3,8

OK | Peruuta | Tulosta

Appendix 11. Profile -, plate - and fastener quantities

Plate quantities, reuse designing

Profile	Material	Number	Length [mm]	Weight [kg]	Area [m2]	Length sum	Weight sum	Area sum	[kg/m]
Clip angles									
L150X150X5	S235JR	3	7533	88,0	4,52	22599	264,0	13,57	
L150X150X5	S235JR	1	8135	95,0	4,88	8135	95,0	4,88	
Sub total, L150X150X5	**S235JR**	**4**				**30734**	**359,0**	**18,45**	**11,7**
TOTAL WEIGHT							**359,0**		
H-sections									
LP-H10020	S350GD+Z275	1	6335	42,3	4,91	6335	42,3	4,91	
LP-H10020	S350GD+Z275	3	7488	49,9	5,86	22464	149,8	17,58	
LP-H10020	S350GD+Z275	8	7533	50,2	5,90	60264	402,0	47,16	
LP-H10020	S350GD+Z275	1	7535	50,3	5,90	7535	50,3	5,90	
LP-H10020	S350GD+Z275	3	8135	54,3	6,39	24405	162,8	19,17	
LP-H10020	S350GD+Z275	3	8363	55,8	6,29	25089	167,3	18,88	
LP-H10020	S350GD+Z275	1	8365	55,8	6,29	8365	55,8	6,29	
LP-H10020	S350GD+Z275	4	8963	59,8	6,78	35852	239,1	27,14	
Sub total, LP-H10020	**S350GD+Z275**	**24**				**190309**	**1269,4**	**147,03**	**6,7**
TOTAL WEIGHT							**1269,4**		
Brace end plates									
PL5X31	S355J2G3	2	112	0,1	0,01	224	0,3	0,02	
Sub total, PL5X31	**S355J2G3**	**2**				**224**	**0,3**	**0,02**	
PL5X44	S355J2G3	8	112	0,2	0,01	896	1,5	0,09	
Sub total, PL5X44	**S355J2G3**	**8**				**896**	**1,5**	**0,09**	
PL5X49	S355J2G3	16	112	0,2	0,01	1792	3,4	0,20	
Sub total, PL5X49	**S355J2G3**	**16**				**1792**	**3,4**	**0,20**	
PL5X49	S355J2G3	268	112	0,2	0,01	30016	57,1	3,34	
Sub total, PL5X49	**S355J2G3**	**268**				**30016**	**57,1**	**3,34**	
PL5X51	S355J2G3	8	112	0,2	0,01	896	1,8	0,10	
Sub total, PL5X51	**S355J2G3**	**8**				**896**	**1,8**	**0,10**	

Profile	Material	Number	Length [mm]	Weight [kg]	Area [m2]	Length sum	Weight sum	Area sum	[kg/m]
PL5X54	S355J2G3	8	112	0,2	0,01	896	1,9	0,11	
Sub total, PL5X54	**S355J2G3**	**8**				**896**	**1,9**	**0,11**	
PL5X71	S355J2G3	2	112	0,3	0,02	224	0,6	0,04	
Sub total, PL5X71	**S355J2G3**	**2**				**224**	**0,6**	**0,04**	
PL5X112	S355J2G3	4	112	0,5	0,03	448	2,0	0,11	
Sub total, PL5X112	**S355J2G3**	**4**				**448**	**2,0**	**0,11**	
TOTAL WEIGHT							**68,6**		
Bottom chord splices									
PL5X60	S355J2G3	24	150	0,4	0,02	3600	8,5	0,48	
Sub total, PL5X60	**S355J2G3**	**24**				**3600**	**8,5**	**0,48**	
PL18X180	S355J2G3	12	570	14,5	0,23	6840	174,0	2,79	
Sub total, PL18X180	**S355J2G3**	**12**				**6840**	**174,0**	**2,79**	
PL30X180	S355J2G3	12	515	21,8	0,23	6180	262,0	2,73	
Sub total, PL30X180	**S355J2G3**	**12**				**6180**	**262,0**	**2,73**	
TOTAL WEIGHT							**444,5**		
Beam web connection plates for gusset plates									
PL6X140	S355J2G3	4	400	2,6	0,12	1600	10,6	0,47	
PL6X140	S355J2G3	8	420	2,8	0,12	3360	22,2	0,99	
Sub total, PL6X140	**S355J2G3**	**12**				**4960**	**32,8**	**1,46**	
TOTAL WEIGHT							**32,8**		
Parapet connection plates									
PL10X80	S355J2G3	16	200	1,3	0,04	3200	20,1	0,60	
Sub total, PL10X80	**S355J2G3**	**16**				**3200**	**20,1**	**0,60**	
PL10X90	S355J2G3	8	200	1,4	0,04	1600	11,3	0,33	
Sub total, PL10X90	**S355J2G3**	**8**				**1600**	**11,3**	**0,33**	
PL10X100	S355J2G3	4	645	5,1	0,14	2580	20,3	0,58	
PL10X100	S355J2G3	4	1245	9,8	0,28	4980	39,1	1,10	
PL10X100	S355J2G3	16	2075	16,3	0,46	33200	260,6	7,34	
Sub total, PL10X100	**S355J2G3**	**24**				**40760**	**320,0**	**9,02**	
TOTAL WEIGHT							**351,4**		

Profile	Material	Number	Length [mm]	Weight [kg]	Area [m2]	Length sum	Weight sum	Area sum	[kg/m]
WQ-Beam connection plates									
PL10X100	S355J2G3	30	195	1,5	0,04	5850	45,0	1,20	
Sub total, PL10X100	**S355J2G3**	**30**				**5850**	**45,0**	**1,20**	
PL10X130	S355J2G3	12	205	2,1	0,06	2460	25,1	0,72	
Sub total, PL10X130	**S355J2G3**	**12**				**2460**	**25,1**	**0,72**	
PL10X150	S355J2G3	3	205	2,4	0,07	615	7,2	0,21	
Sub total, PL10X150	**S355J2G3**	**3**				**615**	**7,2**	**0,21**	
PL10X170	S355J2G3	3	205	2,7	0,08	615	8,1	0,24	
Sub total, PL10X170	**S355J2G3**	**3**				**615**	**8,1**	**0,24**	
PL10X190	S355J2G3	2	240	3,6	0,10	480	7,2	0,20	
Sub total, PL10X190	**S355J2G3**	**2**				**480**	**7,2**	**0,20**	
PL10X200	S355J2G3	6	250	3,9	0,11	1500	23,6	0,65	
Sub total, PL10X200	**S355J2G3**	**6**				**1500**	**23,6**	**0,65**	
PL10X205	S355J2G3	6	240	3,9	0,11	1440	23,2	0,64	
Sub total, PL10X205	**S355J2G3**	**6**				**1440**	**23,2**	**0,64**	
PL10X250	S355J2G3	1	100	2,0	0,06	100	2,0	0,06	
Sub total, PL10X250	**S355J2G3**	**1**				**100**	**2,0**	**0,06**	
PL10X430	S355J2G3	3	250	8,4	0,23	750	25,3	0,69	
PL10X430	S355J2G3	2	310	10,5	0,28	620	20,9	0,56	
Sub total, PL10X430	**S355J2G3**	**5**				**1370**	**46,2**	**1,25**	
TOTAL WEIGHT							187,6		
Door frame connection plates									
PL10X140	S355J2G3	6	295	3,2	0,09	1770	19,5	0,55	
Sub total, PL10X140	**S355J2G3**	**6**				**1770**	**19,5**	**0,55**	
TOTAL WEIGHT							19,5		
Bottom chord end plates									
PL10X152	S355J2G3	12	152	1,8	0,05	1824	21,8	0,63	
Sub total, PL10X152	**S355J2G3**	**12**				**1824**	**21,8**	**0,63**	
TOTAL WEIGHT							21,8		

Profile	Material	Number	Length [mm]	Weight [kg]	Area [m2]	Length sum	Weight sum	Area sum	[kg/m]
Support plates for hollow core slabs									
PL10X180	S355J2G3	1	330	4,7	0,13	330	4,7	0,13	
PL10X180	S355J2G3	2	430	6,1	0,17	860	12,2	0,34	
Sub total, PL10X180	**S355J2G3**	**3**				**1190**	**16,9**	**0,47**	
PL10X190	S355J2G3	3	384	5,7	0,16	1151	17,2	0,47	
PL10X190	S355J2G3	1	528	7,9	0,21	528	7,9	0,21	
Sub total, PL10X190	**S355J2G3**	**4**				**1679**	**25,1**	**0,68**	
TOTAL WEIGHT							**42,0**		
Top chord end plates									
PL10X192	S355J2G3	12	192	2,9	0,08	2304	34,7	0,98	
Sub total, PL10X192	**S355J2G3**	**12**				**2304**	**34,7**	**0,98**	
TOTAL WEIGHT							**34,7**		
WQ-Beam end plates									
PL10X190	S355J2G3	18	195	2,9	0,08	3510	52,4	1,47	
Sub total, PL10X190	**S355J2G3**	**18**				**3510**	**52,4**	**1,47**	
TOTAL WEIGHT							**52,4**		
Column splice plates									
PL10X200	S355J2G3	64	560	8,8	0,24	35840	562,7	15,31	
Sub total, PL10X200	**S355J2G3**	**64**				**35840**	**562,7**	**15,31**	
PL10X240	S355J2G3	64	560	10,6	0,28	35840	675,2	18,23	
Sub total, PL10X240	**S355J2G3**	**64**				**35840**	**675,2**	**18,23**	
TOTAL WEIGHT							**1237,9**		
Column base plates									
PL10X200	S355J2G3	4	200	3,1	0,09	800	12,4	0,36	
Sub total, PL10X200	**S355J2G3**	**4**				**800**	**12,4**	**0,36**	
PL10X200	S355J2G3	60	280	4,3	0,12	16800	259,0	7,22	
Sub total, PL10X200	**S355J2G3**	**60**				**16800**	**259,0**	**7,22**	
PL10X240	S355J2G3	60	280	5,3	0,14	16800	316,5	8,69	
Sub total, PL10X240	**S355J2G3**	**60**				**16800**	**316,5**	**8,69**	
PL15X189	S355J2G3	4	274	5,1	0,10	1096	20,5	0,40	
Sub total, PL15X189	**S355J2G3**	**4**				**1096**	**20,5**	**0,40**	
PL15X198	S355J2G3	4	263	5,0	0,10	1053	20,2	0,39	
Sub total, PL15X198	**S355J2G3**	**4**				**1053**	**20,2**	**0,39**	

Profile	Material	Number	Length [mm]	Weight [kg]	Area [m2]	Length sum	Weight sum	Area sum	[kg/m]
PL25X350	S355J2G3	6	470	32,3	0,37	2820	193,7	2,22	
Sub total, PL25X350	**S355J2G3**	**6**				**2820**	**193,7**	**2,22**	
PL40X390	S355J2G3	12	475	58,2	0,44	5700	698,0	5,28	
Sub total, PL40X390	**S355J2G3**	**12**				**5700**	**698,0**	**5,28**	
PL40X400	S355J2G3	4	475	59,7	0,45	1900	238,6	1,80	
Sub total, PL40X400	**S355J2G3**	**4**				**1900**	**238,6**	**1,80**	
PL40X500	S355J2G3	8	475	74,6	0,55	3800	596,6	4,42	
Sub total, PL40X500	**S355J2G3**	**8**				**3800**	**596,6**	**4,42**	
TOTAL WEIGHT							**2355,5**		
Column end plates									
PL10X200	S355J2G3	32	200	3,1	0,09	6400	99,2	2,88	
Sub total, PL10X200	**S355J2G3**	**32**				**6400**	**99,2**	**2,88**	
PL10X240	S355J2G3	32	200	3,8	0,10	6400	121,6	3,20	
Sub total, PL10X240	**S355J2G3**	**32**				**6400**	**121,6**	**3,20**	
PL10X240	S355J2G3	12	200	3,8	0,10	2400	45,6	1,20	
Sub total, PL10X240	**S355J2G3**	**12**				**2400**	**45,6**	**1,20**	
PL10X240	S355J2G3	1	320	6,0	0,16	320	6,0	0,16	
Sub total, PL10X240	**S355J2G3**	**1**				**320**	**6,0**	**0,16**	
PL10X355	S355J2G3	6	200	5,6	0,15	1200	33,4	0,92	
Sub total, PL10X355	**S355J2G3**	**6**				**1200**	**33,4**	**0,92**	
PL15X194	S355J2G3	4	258	5,0	0,10	1032	20,0	0,39	
Sub total, PL15X194	**S355J2G3**	**4**				**1032**	**20,0**	**0,39**	
PL20X250	S355J2G3	8	240	9,4	0,14	1920	75,4	1,12	
Sub total, PL20X250	**S355J2G3**	**8**				**1920**	**75,4**	**1,12**	
PL20X400	S355J2G3	16	300	18,8	0,27	4800	300,8	4,32	
Sub total, PL20X400	**S355J2G3**	**16**				**4800**	**300,8**	**4,32**	
TOTAL WEIGHT							**702,0**		
Truss top chord doubler plate in support									
PL10X220	S355J2G3	12	220	3,8	0,11	2640	45,6	1,27	
Sub total, PL10X220	**S355J2G3**	**12**				**2640**	**45,6**	**1,27**	
TOTAL WEIGHT							**45,6**		

Profile	Material	Number	Length [mm]	Weight [kg]	Area [m2]	Length sum	Weight sum	Area sum	[kg/m]
Corner column end plate									
PL10X240	S355J2G3	4	240	4,5	0,12	960	18,1	0,50	
Sub total, PL10X240	**S355J2G3**	**4**				**960**	**18,1**	**0,50**	
TOTAL WEIGHT							**18,1**		
Brace connection plates and gusset plates									
PL15X118	S355J2G3	8	140	1,9	0,04	1120	15,6	0,33	
Sub total, PL15X118	**S355J2G3**	**8**				**1120**	**15,6**	**0,33**	
PL15X120	S355J2G3	79	140	2,0	0,04	11060	156,3	3,27	
PL15X120	S355J2G3	1	155	2,2	0,05	155	2,2	0,05	
Sub total, PL15X120	**S355J2G3**	**80**				**11215**	**158,5**	**3,32**	
PL15X122	S355J2G3	5	140	2,0	0,04	700	10,1	0,21	
Sub total, PL15X122	**S355J2G3**	**5**				**700**	**10,1**	**0,21**	
PL15X139	S355J2G3	9	226	3,7	0,07	2034	33,4	0,67	
PL15X139	S355J2G3	4	227	3,7	0,07	908	14,9	0,30	
PL15X139	S355J2G3	1	236	3,9	0,08	236	3,9	0,08	
PL15X139	S355J2G3	2	243	4,0	0,08	486	8,0	0,16	
PL15X139	S355J2G3	1	268	4,4	0,09	268	4,4	0,09	
PL15X139	S355J2G3	3	269	4,4	0,09	808	13,3	0,26	
Sub total, PL15X139	**S355J2G3**	**20**				**4740**	**77,9**	**1,56**	
PL15X140	S355J2G3	4	275	4,5	0,09	1100	18,1	0,36	
PL15X140	S355J2G3	4	305	5,0	0,10	1220	20,1	0,39	
Sub total, PL15X140	**S355J2G3**	**8**				**2320**	**38,2**	**0,75**	
PL15X140	S355J2G3	4	143	2,4	0,05	571	9,4	0,19	
PL15X140	S355J2G3	5	153	2,5	0,05	763	12,6	0,26	
PL15X140	S355J2G3	2	226	3,7	0,07	452	7,4	0,15	
PL15X140	S355J2G3	2	273	4,5	0,09	545	9,0	0,18	
PL15X140	S355J2G3	1	285	4,7	0,09	285	4,7	0,09	
PL15X140	S355J2G3	141	295	4,9	0,10	41595	685,7	13,49	
Sub total, PL15X140	**S355J2G3**	**155**				**44211**	**728,8**	**14,36**	
PL15X196	S355J2G3	2	235	4,0	0,08	471	8,0	0,16	
Sub total, PL15X196	**S355J2G3**	**2**				**471**	**8,0**	**0,16**	
PL15X200	S355J2G3	4	200	4,7	0,09	800	18,8	0,37	
PL15X200	S355J2G3	14	300	7,1	0,13	4200	98,9	1,89	
PL15X200	S355J2G3	38	400	9,4	0,18	15200	358,0	6,76	
PL15X200	S355J2G3	12	500	11,8	0,22	6000	141,3	2,65	
PL15X200	S355J2G3	8	700	16,5	0,31	5600	131,9	2,46	
Sub total, PL15X200	**S355J2G3**	**76**				**31800**	**748,9**	**14,13**	

Profile	Material	Number	Length [mm]	Weight [kg]	Area [m2]	Length sum	Weight sum	Area sum	[kg/m]
PL15X204	S355J2G3	2	251	4,5	0,09	501	8,9	0,17	
Sub total, PL15X204	**S355J2G3**	**2**				**501**	**8,9**	**0,17**	
PL15X312	S355J2G3	2	470	13,0	0,24	941	26,0	0,48	
Sub total, PL15X312	**S355J2G3**	**2**				**941**	**26,0**	**0,48**	
PL15X316	S355J2G3	2	472	14,0	0,26	944	27,9	0,51	
Sub total, PL15X316	**S355J2G3**	**2**				**944**	**27,9**	**0,51**	
TOTAL WEIGHT							**1848,8**		
End beam splice plates									
PL20X180	S355J2G3	4	182	5,1	0,08	727	20,6	0,32	
Sub total, PL20X180	**S355J2G3**	**4**				**727**	**20,6**	**0,32**	
TOTAL WEIGHT							**20,6**		
Truss top chord splice									
PL20X400	S355J2G3	12	220	13,8	0,20	2640	165,8	2,41	
Sub total, PL20X400	**S355J2G3**	**12**				**2640**	**165,8**	**2,41**	
TOTAL WEIGHT							**165,8**		
Truss support connection plate to column									
PL20X400	S355J2G3	16	300	18,8	0,27	4800	300,8	4,32	
Sub total, PL20X400	**S355J2G3**	**16**				**4800**	**300,8**	**4,32**	
TOTAL WEIGHT							**300,8**		
Sandwich element clamp connection plate									
PL3X200	S355J2G3	40	150	0,7	0,06	6000	28,0	2,40	
PL3X200	S355J2G3	248	300	1,4	0,12	74400	347,2	29,76	
Sub total, PL3X200	**S355J2G3**	**288**				**80400**	**375,2**	**32,16**	
TOTAL WEIGHT							**375,2**		
Total steel kilograms:							**9954,0**		

Profile quantities, reuse designing

Profile	Material	Number	Length [mm]	Weight [kg]	Area [m2]	Length sum	Weight sum	Area sum	
Braces, door frames, inside columns and inside beams									
CFRHS120X120X4	S355J2H	1	1800	25,6	0,84	1800	25,6	0,84	
CFRHS120X120X4	S355J2H	2	3420	48,7	1,59	6840	97,4	3,19	
CFRHS120X120X4	S355J2H	4	3555	50,6	1,66	14220	202,6	6,63	
CFRHS120X120X4	S355J2H	2	4884	69,6	2,28	9768	139,2	4,55	
CFRHS120X120X4	S355J2H	2	4890	69,7	2,28	9780	139,3	4,56	
CFRHS120X120X4	S355J2H	2	5070	72,2	2,36	10140	144,5	4,73	
CFRHS120X120X4	S355J2H	3	5280	75,2	2,46	15840	225,7	7,39	
CFRHS120X120X4	S355J2H	46	5500	78,4	2,56	253000	3604,3	117,97	
CFRHS120X120X4	S355J2H	4	6100	86,9	2,84	24400	347,6	11,38	
CFRHS120X120X4	S355J2H	2	6190	88,2	2,89	12380	176,4	5,77	
CFRHS120X120X4	S355J2H	12	7850	111,8	3,66	94200	1342,0	43,93	
CFRHS120X120X4	S355J2H	1	7851	111,8	3,66	7851	111,8	3,66	
CFRHS120X120X4	S355J2H	6	8825	125,7	4,12	52950	754,3	24,69	
CFRHS120X120X4	S355J2H	2	10267	146,3	4,79	20534	292,5	9,57	
CFRHS120X120X4	S355J2H	2	11512	164,0	5,37	23023	328,0	10,74	
Sub total, CFRHS120X120X4	**S355J2H**	**91**				**556726**	**7931,2**	**259,60**	
TOTAL WEIGHT							**7931,2**		
Diagonal bars									
CFRHS140X140X5	S355J2H	12	2166	44,8	1,13	25987	537,7	13,61	
CFRHS140X140X5	S355J2H	12	2487	51,4	1,33	29839	617,3	15,91	
CFRHS140X140X5	S355J2H	12	2488	51,5	1,31	29854	617,7	15,74	
CFRHS140X140X5	S355J2H	12	2753	57,0	1,49	33038	683,5	17,85	
CFRHS140X140X5	S355J2H	12	2755	57,0	1,48	33058	683,9	17,71	
CFRHS140X140X5	S355J2H	12	3043	63,0	1,65	36514	755,5	19,82	
CFRHS140X140X5	S355J2H	12	3044	63,0	1,65	36526	755,7	19,77	
CFRHS140X140X5	S355J2H	12	3334	69,0	1,81	40007	827,7	21,72	
Sub total, CFRHS140X140X5	**S355J2H**	**96**				**264823**	**5479,0**	**142,13**	
TOTAL WEIGHT							**5479,0**		

Profile	Material	Number	Length [mm]	Weight [kg]	Area [m2]	Length sum	Weight sum	Area sum
Bottom chords								
CFRHS160X160X6	S355J2H	12	13226	373,8	8,19	158715	4485,3	98,24
Sub total, CFRHS160X160X6	**S355J2H**	**12**				**158715**	**4485,3**	**98,24**
TOTAL WEIGHT							**4485,3**	
Top chords								
CFRHS200X200X10	S355J2H	12	188	10,7	0,14	2259	128,7	1,71
CFRHS200X200X10	S355J2H	1	15206	866,2	11,51	15206	866,2	11,51
CFRHS200X200X10	S355J2H	11	15211	866,5	11,52	167325	9531,6	126,68
Sub total, CFRHS200X200X10	**S355J2H**	**24**				**184790**	**10526,5**	**139,90**
TOTAL WEIGHT							**10526,5**	
Beams								
HEA180	S355J2G3	1	15192	539,6	15,56	15192	539,6	15,56
HEA180	S355J2G3	3	15194	539,7	15,56	45582	1619,1	46,68
Sub total, HEA180	**S355J2G3**	**4**				**60774**	**2158,7**	**62,24**
TOTAL WEIGHT							**2158,7**	
Columns								
HEA240	S355J2G3	4	219	13,2	0,30	876	52,9	1,20
HEA240	S355J2G3	4	850	51,2	1,16	3398	205,0	4,65
HEA240	S355J2G3	4	1450	87,4	1,98	5798	349,7	7,94
HEA240	S355J2G3	30	3000	181,0	4,11	90000	5428,7	123,21
HEA240	S355J2G3	24	6000	361,9	8,21	144000	8686,0	197,14
Sub total, HEA240	**S355J2G3**	**66**				**244072**	**14722,3**	**334,14**
TOTAL WEIGHT							**14722,3**	
WQ-Beams								
WQ200X5-20X190-10X330/15	S355J2G3	1	5550	397,6	5,99	5550	397,6	5,99
WQ200X5-20X190-10X330/15	S355J2G3	1	5980	428,4	6,46	5980	428,4	6,46
Sub total, WQ200X5-20X190-10X330/15	**S355J2G3**	**2**				**11530**	**826,0**	**12,45**
WQ200X5-20X190-10X430	S355J2G3	2	5550	441,2	7,10	11100	882,4	14,21
WQ200X5-20X190-10X430	S355J2G3	2	5980	475,4	7,65	11960	950,7	15,31
Sub total, WQ200X5-20X190-10X430	**S355J2G3**	**4**				**23060**	**1833,1**	**29,52**
WQ200X5-20X190-10X430/15	S355J2G3	3	5473	435,0	7,00	16418	1305,1	21,01
Sub total, WQ200X5-20X190-10X430/15	**S355J2G3**	**3**				**16418**	**1305,1**	**21,01**
TOTAL WEIGHT							**3964,2**	

Profile	Material	Number	Length [mm]	Weight [kg]	Area [m2]	Length sum	Weight sum	Area sum
Load-bearing sheets								
T130M-75L-930	S350GD+Z275	102	12200	215,5	11,35	1244400	21984,723	1157,7
T130M-75L-930	S350GD+Z275	34	6725	118,7	6,25	228650	4035,375	212,5
TOTAL WEIGHT							**26020,1**	
Total steel kilograms:							**75287,3**	
Steel kilograms available for reuse:							**70715,5**	

Sandwich elements				
Profile	Number	Length [mm]	Width [mm]	Area [m2]
SPA230	2	217	1200,00	0,521
SPA230	6	300	1200,00	2,160
SPA230	2	565	1200,00	1,356
SPA230	1	1050	1200,00	1,260
SPA230	1	2250	1200,00	2,700
SPA230	1	4490	1200,00	5,388
SPA230	99	5970	1200,00	709,236
SPA230	2	6033	1200,00	14,479
SPA230	4	6035	1200,00	28,968
SPA230	3	6036	1200,00	21,730
SPA230	5	6100	1200,00	36,600
SPA230	29	6190	1200,00	215,412
SPA230	1	6253	1200,00	7,504
SPA230	31	6430	1200,00	239,196
Sub total, SPA230	**187**			**1286,509**

Fastener quantities, reuse designing

Item	Site or Workshop	Diameter	Size	Standard	Strength	Material or surfacing	Weight/piece	Number	Weight
Workshop fasteners									
Column splice bolts	Workshop	24	M24*90	ISO4014	8.8-8-200H	Hot Dip Galvanized	0,418	1152	481,54
Column base plate bolts	Workshop	24	M24*100	ISO4014	8.8-8-200H	Hot Dip Galvanized	0,436	540	235,44
Frame column end plate bolts	Workshop	24	M24*100	ISO4014	8.8-8-200H	Hot Dip Galvanized	0,436	192	83,71
Inside column end plate bolts	Workshop	24	M24*85	ISO4014	8.8-8-200H	Hot Dip Galvanized	0,401	48	19,25
Brace connection plates to truss	Workshop	24	M24*280	ISO4014	8.8-8-200H	Hot Dip Galvanized	1,066	160	170,56
Brace connection plates to beams	Workshop	20	M20*60	ISO4014	8.8-8-200H	Hot Dip Galvanized	0,209	48	10,03
Corner column end plate splice	Workshop	24	M24*80	ISO4014	8.8-8-200H	Hot Dip Galvanized	0,384	16	6,14
Screws for H-section connection	Workshop	5,5	5,5*80	ETA-13/0183		AISI 304	0,018	800	14,72
TOTAL								**2956**	**1021,39**
Workshop nuts									
M20 nuts	Workshop	20	M20	ISO4032	8.8-8-200H	Hot Dip Galvanized	0,063	48	3,02
M24 nuts	Workshop	24	M24	ISO4032	8.8-8-200H	Hot Dip Galvanized	0,108	2108	227,66
TOTAL								**2156**	**230,69**
Workshop washers									
M20 washers	Workshop	20	M20	ISO7089	8.8-8-200H	Hot Dip Galvanized	0,017	96	1,65
M24 washers	Workshop	24	M24	ISO7089	8.8-8-200H	Hot Dip Galvanized	0,032	4216	136,18
TOTAL								**4312**	**137,83**

Item	Site or Workshop	Diameter	Size	Standard	Strength	Material or surfacing	Weight/piece	Number	Weight
Site fasteners									
Top chord splice	Site	24	M24*80	ISO4014	8.8-8-200H	Hot Dip Galvanized	0,384	24	9,22
Bottom chord splice	Site	24	M24*110	ISO4014	8.8-8-200H	Hot Dip Galvanized	0,487	72	35,06
Beam splice	Site	24	M24*80	ISO4014	8.8-8-200H	Hot Dip Galvanized	0,384	8	3,07
Beam connection to corner columns	Site	24	M24*60	ISO4014	8.8-8-200H	Hot Dip Galvanized	0,315	16	5,04
Beam connection to end columns	Site	20	M20*65	ISO4014	8.8-8-200H	Hot Dip Galvanized	0,221	32	7,07
Truss connection to column	Site	24	M24*80	ISO4014	8.8-8-200H	Hot Dip Galvanized	0,384	48	18,43
Roof brace connections	Site	20	M20*70	ISO4014	8.8-8-200H	Hot Dip Galvanized	0,233	236	54,99
Wall brace middle plate connections	Site	20	M20*70	ISO4014	8.8-8-200H	Hot Dip Galvanized	0,233	16	3,73
Inside second level tube section connections	Site	20	M20*70	ISO4014	8.8-8-200H	Hot Dip Galvanized	0,233	16	3,73
Wall brace connections	Site	20	M20*65	ISO4014	8.8-8-200H	Hot Dip Galvanized	0,221	32	7,07
WQ-Beam connections	Site	20	M20*65	ISO4014	8.8-8-200H	Hot Dip Galvanized	0,221	27	5,97
WQ-Beam connections	Site	20	M20*60	ISO4014	8.8-8-200H	Hot Dip Galvanized	0,209	54	11,29
Door frame connections	Site	20	M20*60	ISO4014	8.8-8-200H	Hot Dip Galvanized	0,209	12	2,51
Sandwich element connections	Site	12	M12*270	ISO4014	8.8-8-200H	Hot Dip Galvanized	0,253	288	72,86
Screws for sandwich element connections	Site	6,3	6,3*285	DIN7504		Ruspert coat	0,052	261	13,57
TOTAL								**1142**	**253,61**
Site nuts									
M20 nuts	Site	20	M20	ISO4032	8.8-8-200H	Hot Dip Galvanized	0,063	393	24,76
M24 nuts	Site	24	M24	ISO4032	8.8-8-200H	Hot Dip Galvanized	0,108	168	18,14
TOTAL								**561**	**42,90**
Site washers									
M20 washers	Workshop	20	M20	ISO7089	8.8-8-200H	Hot Dip Galvanized	0,017	786	13,52
M24 washers	Workshop	24	M24	ISO7089	8.8-8-200H	Hot Dip Galvanized	0,032	336	10,85
TOTAL								**1122**	**24,37**

Profile and fitting quantities, example building

RUUKKI **OUTFITTING RATE** Page:

List contents:		Author:	Pada Dan Christian
Project name:	KOy Viinikankatu 55	Date:	28.09.2017
Project address:	33800 Tampere	Revision:	
	33800 Tampere	Revision date:	
Project number:	1	Revision by:	
www.ruukki.com Document number:			

Assembly type	Position	Number	Weight (main parts)	Weight (fittings)	Fittings [%]	Reinforcement (Composite columns)	Weight	Weight sum
BEAM	1B-29	1	545,6	27,5	5,0		573,1	573,1
BEAM	1B-30	1	545,6	27,5	5,0		573,1	573,1
BEAM	1B-31	1	545,6	27,5	5,0		573,1	573,1
BEAM	1B-32	1	545,6	28,4	5,2		574,0	574,0
BEAM	1B-36	2	91,2				91,2	182,4
BEAM	1B-37	1	62,7				62,7	62,7
BEAM	1B-38	1	156,6	6,9	4,4		163,5	163,5
BEAM	1B-39	1		28,8			28,8	28,8
BEAM	1B-40	1	130,4	8,5	6,5		138,9	138,9
BEAM	1B-41	1	66,1	5,3	8,0		71,4	71,4
BEAM	1B-42	1	66,3	5,3	8,0		71,6	71,6
BEAM	1B-43	1	148,2	5,4	3,6		153,5	153,5
BEAM	1B-44	2	4,6	3,7	80,4		8,3	16,6
SUB TOTAL FOR 'BEAM':		**15**	**3004**	**179**	**5,9**			**3183**
BOTTOM-CHORD	1T-16	1	1240,7	77,7	6,3		1318,4	1318,4
BOTTOM-CHORD	1T-17	1	1240,7	77,7	6,3		1318,4	1318,4
BOTTOM-CHORD	1T-18	1	1240,7	78,6	6,3		1319,2	1319,2
BOTTOM-CHORD	1T-19	1	1240,7	78,6	6,3		1319,2	1319,2
BOTTOM-CHORD	1T-20	8	1240,7	66,2	5,3		1306,9	10455,1
SUB TOTAL FOR 'TRUSSES':		**12**	**14888**	**842**	**5,7**			**15730**
BRACE	1S-95	2	93,2	8,5	9,1		101,6	203,3
BRACE	1S-96	1	64,7	8,5	13,1		73,1	73,1
BRACE	1S-97	2	75,5	5,3	7,0		80,8	161,7
BRACE	1S-98	1	112,9	5,3	4,7		118,2	118,2
BRACE	1S-99	1	111,9	5,3	4,7		117,2	117,2
BRACE	1S-100	2	61,4	5,3	8,6		66,7	133,4
BRACE	1S-101	1	102,1	5,3	5,2		107,4	107,4
BRACE	1S-102	1	103,4	5,3	5,1		108,7	108,7
BRACE	1S-103	1	248,3	12,9	5,2		261,2	261,2
BRACE	1S-104	1	248,3	12,9	5,2		261,2	261,2
BRACE	1S-105	1	153,0	9,7	6,3		162,6	162,6
BRACE	1S-106	2	117,9	6,3	5,3		124,2	248,4
BRACE	1S-107	2	117,0	6,3	5,4		123,3	246,6
BRACE	1S-108	6	78,9	5,3	6,7		84,2	505,4
BRACE	1S-109	2	76,9	5,3	6,9		82,2	164,4
BRACE	1S-110	1	64,7	5,3	8,2		70,0	70,0
BRACE	1S-111	2	62,6	5,3	8,5		67,9	135,9
BRACE	1S-112	1	112,9	5,3	4,7		118,2	118,2
BRACE	1S-113	2	86,1	5,3	6,2		91,4	182,8
BRACE	1S-114	1	111,9	5,3	4,7		117,2	117,2
BRACE	1S-115	1	102,1	5,3	5,2		107,4	107,4
BRACE	1S-116	1	103,4	5,3	5,1		108,7	108,7
BRACE	1S-117	2	73,4	5,3	7,2		78,7	157,4
SUB TOTAL FOR 'BRACE':		**37**	**3641**	**229**	**6,3**			**3870**

COLUMN	1C-78	1	350,7	40,3	11,5	391,1	391,1
COLUMN	1C-79	1	350,7	36,8	10,5	387,6	387,6
COLUMN	1C-80	1	350,7	36,8	10,5	387,6	387,6
COLUMN	1C-81	1	340,9	68,5	20,1	409,4	409,4
COLUMN	1C-82	1	340,9	76,0	22,3	416,9	416,9
COLUMN	1C-83	1	340,9	76,0	22,3	416,9	416,9
COLUMN	1C-84	1	351,9	70,4	20,0	422,3	422,3
COLUMN	1C-85	1	351,9	70,4	20,0	422,3	422,3
COLUMN	1C-86	1	351,9	73,6	20,9	425,5	425,5
COLUMN	1C-87	2	118,1	41,0	34,7	159,2	318,3
COLUMN	1C-88	1	117,8	45,4	38,5	163,2	163,2
COLUMN	1C-89	4	669,3	145,8	21,8	815,2	3260,7
COLUMN	1C-90	1	669,3	151,4	22,6	820,7	820,7
COLUMN	1C-91	1	669,3	147,7	22,1	817,1	817,1
COLUMN	1C-92	2	544,0	156,1	28,7	700,2	1400,3
COLUMN	1C-93	1	544,0	156,1	28,7	700,2	700,2
COLUMN	1C-94	1	544,0	156,1	28,7	700,2	700,2
COLUMN	1C-95	2	544,0	145,8	26,8	689,9	1379,8
COLUMN	1C-96	3	136,1	3,9	2,9	140,0	420,0
COLUMN	1C-97	3	136,1	3,9	2,9	140,0	420,0
COLUMN	1C-98	1	50,4	3,6	7,1	54,0	54,0
COLUMN	1C-99	1	50,4	3,6	7,1	54,0	54,0
COLUMN	1C-100	1	50,4	4,2	8,3	54,5	54,5
COLUMN	1C-101	3	59,8			59,8	179,3
COLUMN	1C-102	1	449,5	40,5	9,0	490,0	490,0
COLUMN	1C-103	1	442,8	81,2	18,3	524,0	524,0
COLUMN	1C-104	1	457,1	75,6	16,5	532,7	532,7
COLUMN	1C-105	2	163,9	44,4	27,1	208,4	416,7
COLUMN	1C-106	1	105,7	37,8	35,8	143,5	143,5
COLUMN	1C-107	1	105,7	35,8	33,9	141,5	141,5
SUB TOTAL FOR 'COLUMN':		**43**	**13800**	**2869**	**20,8**		**16671**
OVIPIELI	1O-23	2	28,7	1,4	4,9	30,1	60,2
OVIPIELI	1O-24	2	29,8	1,9	6,4	31,7	63,4
OVIPIELI	1O-36	1	16,2			16,2	16,2
OVIPIELI	1O-37	1	35,9			35,9	35,9
SUB TOTAL FOR 'OVIPIELI':		**6**	**169**	**7**	**3,9**		**176**
PLATE	1X-4	2		1,4		1,4	2,8
PLATE	4	1		2,1		2,1	2,1
PLATE	5	3		3,1		3,1	9,4
SUB TOTAL FOR 'PLATE':		**6**		**14**			**14**
SSL	1B-33	1	171,3	9,9	5,8	181,1	181,1
SSL	1B-34	1	201,0	9,9	4,9	210,9	210,9
SSL	1B-35	1	230,8	9,9	4,3	240,6	240,6
SUB TOTAL FOR 'SSL':		**3**	**603**	**30**	**4,9**		**633**
WQ-BEAM	1W-15	1	393,6	20,6	5,2	414,2	414,2
WQ-BEAM	1W-16	1	361,5	30,9	8,5	392,4	392,4
WQ-BEAM	1W-17	1	249,3	11,4	4,6	260,6	260,6
WQ-BEAM	1W-18	2	476,7	11,4	2,4	488,1	976,2
WQ-BEAM	1W-19	1	369,4	10,2	2,8	379,6	379,6
WQ-BEAM	1W-20	2	296,2	10,2	3,4	306,4	612,9
SUB TOTAL FOR 'WQ-BEAM':		**8**	**2920**	**116**	**4,0**		**3036**
TOTAL FOR LISTED ASSEMBLIES:		**130**	**39026**	**4286**	**11,0**		**43312**

SANDWICH PANELS

	thickn.	Area	per/floor m2
Outer walls	230	1279,1	0,99
Inner walls	100	220,7	0,17

TRAPEZOIDAL SHEETINGS

Profile

	weight kg/m2	Area	kg	
T130-75L-930-12	15,19	209,3	3179,267	
T130-75L-930-10	12,66	227,1	2875,086	
T130-75L-930-10	12,66	257,8	3263,748	
T130-75L-930-08	10,13	454,2	4601,046	
T130-75L-930-08	10,13	193,35	1958,6355	
T130-75L-930-08	10,13	175,55	1778,3215	
T45-30W-905-09	11,4	2,05	23,37	
		1519,35	17679,474	kg
		1,17415	13,7	kg/m2

STEEL FRAME

43312	kg
33,5	kg/m2

Fastener quantities, example building

RUUKKI

BOLT LIST

Page: 1 (1)

List contents:		Author:	Pada Dan Christian
Project name:	KOy Viinikankatu 55	Date:	21.12.2017
Project address:	Viinikankatu 55 33800 Tampere	Revision:	
		Revision date:	
Project number:	N-1101	Revision by:	
Document number:			

www.ruukki.com

Standard	Grade	Size	Number	Project sourcing (own control)	Site (Acceptance inspection)	Design
ISO 4014, ISO4017 and ISO4032 always according to standard 15048-1						
DIN931	8.8	BOLT M24 X 90	72			
DIN931	8.8	BOLT M24 X 80	48			
DIN931	8.8	BOLT M20 X 75	96			
DIN931	8.8	BOLT M20 X 70	84			
DIN931	8.8	BOLT M20 X 65	68			
DIN931	200HV	BOLT M16 X 60	4			
DIN931	200HV	BOLT M16 X 55	3			
DIN931	200HV	BOLT M12 X 45	12			
DIN934		NUT M24	120			
DIN934		NUT M20	248			
DIN934		NUT M16	7			
DIN934		NUT M12	12			
DIN125		WASHER M24	144			
DIN125		WASHER M20	448			
DIN125		WASHER M16	7			
DIN125		WASHER M12	24			

Appendix 12. NPV calculations

	NPV
Interest rate	1 %
Extra investment	31,25 %
Investment limit	0

Residual value	0,10	0,20	0,30	0,40	0,50	0,60	0,70	0,80	0,90
Year									
1	-0,213	-0,114	-0,015	0,084	0,183	0,282	0,381	0,480	0,579
2	-0,214	-0,116	-0,018	0,080	0,178	0,276	0,374	0,472	0,570
3	-0,215	-0,118	-0,021	0,076	0,173	0,270	0,367	0,464	0,561
4	-0,216	-0,120	-0,024	0,072	0,168	0,264	0,360	0,456	0,552
5	-0,217	-0,122	-0,027	0,068	0,163	0,258	0,354	0,449	0,544
6	-0,218	-0,124	-0,030	0,064	0,159	0,253	0,347	0,441	0,535
7	-0,219	-0,126	-0,033	0,061	0,154	0,247	0,340	0,434	0,527
8	-0,220	-0,128	-0,035	0,057	0,149	0,242	0,334	0,426	0,519
9	-0,221	-0,130	-0,038	0,053	0,145	0,236	0,328	0,419	0,510
10	-0,222	-0,131	-0,041	0,050	0,140	0,231	0,321	0,412	0,502
11	-0,223	-0,133	-0,044	0,046	0,136	0,225	0,315	0,405	0,494
12	-0,224	-0,135	-0,046	0,042	0,131	0,220	0,309	0,397	0,486
13	-0,225	-0,137	-0,049	0,039	0,127	0,215	0,303	0,390	0,478
14	-0,226	-0,139	-0,052	0,035	0,122	0,209	0,296	0,383	0,470
15	-0,226	-0,140	-0,054	0,032	0,118	0,204	0,290	0,377	0,463
16	-0,227	-0,142	-0,057	0,029	0,114	0,199	0,284	0,370	0,455
17	-0,228	-0,144	-0,059	0,025	0,110	0,194	0,279	0,363	0,447
18	-0,229	-0,145	-0,062	0,022	0,106	0,189	0,273	0,356	0,440
19	-0,230	-0,147	-0,064	0,019	0,101	0,184	0,267	0,350	0,432
20	-0,231	-0,149	-0,067	0,015	0,097	0,179	0,261	0,343	0,425
21	-0,231	-0,150	-0,069	0,012	0,093	0,174	0,256	0,337	0,418
22	-0,232	-0,152	-0,071	0,009	0,089	0,170	0,250	0,330	0,411
23	-0,233	-0,153	-0,074	0,006	0,085	0,165	0,244	0,324	0,403
24	-0,234	-0,155	-0,076	0,003	0,081	0,160	0,239	0,318	0,396
25	-0,235	-0,157	-0,079	-0,001	0,077	0,155	0,233	0,311	0,389
26	-0,235	-0,158	-0,081	-0,004	0,074	0,151	0,228	0,305	0,382
27	-0,236	-0,160	-0,083	-0,007	0,070	0,146	0,223	0,299	0,375
28	-0,237	-0,161	-0,085	-0,010	0,066	0,142	0,217	0,293	0,369
29	-0,238	-0,163	-0,088	-0,013	0,062	0,137	0,212	0,287	0,362
30	-0,238	-0,164	-0,090	-0,016	0,058	0,133	0,207	0,281	0,355
31	-0,239	-0,166	-0,092	-0,019	0,055	0,128	0,202	0,275	0,349
32	-0,240	-0,167	-0,094	-0,022	0,051	0,124	0,197	0,269	0,342
33	-0,240	-0,168	-0,096	-0,024	0,048	0,120	0,192	0,264	0,336
34	-0,241	-0,170	-0,099	-0,027	0,044	0,115	0,187	0,258	0,329
35	-0,242	-0,171	-0,101	-0,030	0,040	0,111	0,182	0,252	0,323
36	-0,243	-0,173	-0,103	-0,033	0,037	0,107	0,177	0,247	0,317
37	-0,243	-0,174	-0,105	-0,036	0,034	0,103	0,172	0,241	0,310

NPV

Interest rate	2 %
Extra investment	31,25 %
Investment limit	0

Residual value	0,10	0,20	0,30	0,40	0,50	0,60	0,70	0,80	0,90
Year									
1	-0,214	-0,116	-0,018	0,080	0,178	0,276	0,374	0,472	0,570
2	-0,216	-0,120	-0,024	0,072	0,168	0,264	0,360	0,456	0,553
3	-0,218	-0,124	-0,030	0,064	0,159	0,253	0,347	0,441	0,536
4	-0,220	-0,128	-0,035	0,057	0,149	0,242	0,334	0,427	0,519
5	-0,222	-0,131	-0,041	0,050	0,140	0,231	0,322	0,412	0,503
6	-0,224	-0,135	-0,046	0,043	0,131	0,220	0,309	0,398	0,487
7	-0,225	-0,138	-0,051	0,036	0,123	0,210	0,297	0,384	0,471
8	-0,227	-0,142	-0,056	0,029	0,114	0,200	0,285	0,370	0,456
9	-0,229	-0,145	-0,061	0,022	0,106	0,190	0,273	0,357	0,441
10	-0,230	-0,148	-0,066	0,016	0,098	0,180	0,262	0,344	0,426
11	-0,232	-0,152	-0,071	0,009	0,090	0,170	0,250	0,331	0,411
12	-0,234	-0,155	-0,076	0,003	0,082	0,161	0,239	0,318	0,397
13	-0,235	-0,158	-0,081	-0,003	0,074	0,151	0,229	0,306	0,383
14	-0,237	-0,161	-0,085	-0,009	0,066	0,142	0,218	0,294	0,370
15	-0,238	-0,164	-0,090	-0,015	0,059	0,133	0,208	0,282	0,356
16	-0,240	-0,167	-0,094	-0,021	0,052	0,125	0,197	0,270	0,343
17	-0,241	-0,170	-0,098	-0,027	0,045	0,116	0,187	0,259	0,330
18	-0,242	-0,172	-0,102	-0,032	0,038	0,108	0,178	0,248	0,318
19	-0,244	-0,175	-0,107	-0,038	0,031	0,099	0,168	0,237	0,305
20	-0,245	-0,178	-0,111	-0,043	0,024	0,091	0,159	0,226	0,293
21	-0,247	-0,181	-0,115	-0,049	0,017	0,083	0,149	0,215	0,281
22	-0,248	-0,183	-0,118	-0,054	0,011	0,076	0,140	0,205	0,270
23	-0,249	-0,186	-0,122	-0,059	0,005	0,068	0,131	0,195	0,258
24	-0,250	-0,188	-0,126	-0,064	-0,002	0,061	0,123	0,185	0,247
25	-0,252	-0,191	-0,130	-0,069	-0,008	0,053	0,114	0,175	0,236
26	-0,253	-0,193	-0,133	-0,073	-0,014	0,046	0,106	0,166	0,225
27	-0,254	-0,195	-0,137	-0,078	-0,020	0,039	0,098	0,156	0,215
28	-0,255	-0,198	-0,140	-0,083	-0,025	0,032	0,090	0,147	0,204
29	-0,256	-0,200	-0,144	-0,087	-0,031	0,025	0,082	0,138	0,194
30	-0,257	-0,202	-0,147	-0,092	-0,036	0,019	0,074	0,129	0,184
31	-0,258	-0,204	-0,150	-0,096	-0,042	0,012	0,066	0,120	0,175
32	-0,259	-0,206	-0,153	-0,100	-0,047	0,006	0,059	0,112	0,165
33	-0,260	-0,208	-0,156	-0,104	-0,052	0,000	0,052	0,104	0,156
34	-0,261	-0,210	-0,159	-0,108	-0,057	-0,006	0,045	0,096	0,147
35	-0,262	-0,212	-0,162	-0,112	-0,062	-0,012	0,038	0,088	0,138
36	-0,263	-0,214	-0,165	-0,116	-0,067	-0,018	0,031	0,080	0,129
37	-0,264	-0,216	-0,168	-0,120	-0,072	-0,024	0,024	0,072	0,120

NPV

Interest rate	3 %
Extra investment	31,25 %
Investment limit	0

Residual value	0,10	0,20	0,30	0,40	0,50	0,60	0,70	0,80	0,90
Year									
1	-0,215	-0,118	-0,021	0,076	0,173	0,270	0,367	0,464	0,561
2	-0,218	-0,124	-0,030	0,065	0,159	0,253	0,347	0,442	0,536
3	-0,221	-0,129	-0,038	0,054	0,145	0,237	0,328	0,420	0,511
4	-0,224	-0,135	-0,046	0,043	0,132	0,221	0,309	0,398	0,487
5	-0,226	-0,140	-0,054	0,033	0,119	0,205	0,291	0,378	0,464
6	-0,229	-0,145	-0,061	0,022	0,106	0,190	0,274	0,357	0,441
7	-0,231	-0,150	-0,069	0,013	0,094	0,175	0,257	0,338	0,419
8	-0,234	-0,155	-0,076	0,003	0,082	0,161	0,240	0,319	0,398
9	-0,236	-0,159	-0,083	-0,006	0,071	0,147	0,224	0,301	0,377
10	-0,238	-0,164	-0,089	-0,015	0,060	0,134	0,208	0,283	0,357
11	-0,240	-0,168	-0,096	-0,024	0,049	0,121	0,193	0,265	0,338
12	-0,242	-0,172	-0,102	-0,032	0,038	0,108	0,178	0,249	0,319
13	-0,244	-0,176	-0,108	-0,040	0,028	0,096	0,164	0,232	0,300
14	-0,246	-0,180	-0,114	-0,048	0,018	0,084	0,150	0,216	0,283
15	-0,248	-0,184	-0,120	-0,056	0,008	0,073	0,137	0,201	0,265
16	-0,250	-0,188	-0,126	-0,063	-0,001	0,061	0,124	0,186	0,248
17	-0,252	-0,191	-0,131	-0,070	-0,010	0,051	0,111	0,172	0,232
18	-0,254	-0,195	-0,136	-0,078	-0,019	0,040	0,099	0,157	0,216
19	-0,255	-0,198	-0,141	-0,084	-0,027	0,030	0,087	0,144	0,201
20	-0,257	-0,202	-0,146	-0,091	-0,036	0,020	0,075	0,130	0,186
21	-0,259	-0,205	-0,151	-0,097	-0,044	0,010	0,064	0,118	0,171
22	-0,260	-0,208	-0,156	-0,104	-0,052	0,001	0,053	0,105	0,157
23	-0,262	-0,211	-0,160	-0,110	-0,059	-0,008	0,042	0,093	0,144
24	-0,263	-0,214	-0,165	-0,116	-0,067	-0,017	0,032	0,081	0,130
25	-0,265	-0,217	-0,169	-0,121	-0,074	-0,026	0,022	0,070	0,117
26	-0,266	-0,220	-0,173	-0,127	-0,081	-0,034	0,012	0,058	0,105
27	-0,267	-0,222	-0,177	-0,132	-0,087	-0,042	0,003	0,048	0,093
28	-0,269	-0,225	-0,181	-0,138	-0,094	-0,050	-0,007	0,037	0,081
29	-0,270	-0,228	-0,185	-0,143	-0,100	-0,058	-0,015	0,027	0,069
30	-0,271	-0,230	-0,189	-0,148	-0,107	-0,065	-0,024	0,017	0,058
31	-0,273	-0,233	-0,193	-0,153	-0,113	-0,073	-0,033	0,007	0,047
32	-0,274	-0,235	-0,196	-0,157	-0,118	-0,079	-0,041	-0,002	0,037
33	-0,275	-0,237	-0,199	-0,162	-0,124	-0,086	-0,049	-0,011	0,027
34	-0,276	-0,239	-0,203	-0,166	-0,129	-0,093	-0,056	-0,020	0,017
35	-0,277	-0,241	-0,206	-0,170	-0,135	-0,099	-0,064	-0,028	0,007
36	-0,278	-0,243	-0,209	-0,174	-0,140	-0,105	-0,071	-0,036	-0,002
37	-0,279	-0,246	-0,212	-0,179	-0,145	-0,112	-0,078	-0,045	-0,011

NPV

Interest rate	4 %
Extra investment	31,25 %
Investment limit	0

Residual value	0,10	0,20	0,30	0,40	0,50	0,60	0,70	0,80	0,90
Year									
1	-0,216	-0,120	-0,024	0,072	0,168	0,264	0,361	0,457	0,553
2	-0,220	-0,128	-0,035	0,057	0,150	0,242	0,335	0,427	0,520
3	-0,224	-0,135	-0,046	0,043	0,132	0,221	0,310	0,399	0,488
4	-0,227	-0,142	-0,056	0,029	0,115	0,200	0,286	0,371	0,457
5	-0,230	-0,148	-0,066	0,016	0,098	0,181	0,263	0,345	0,427
6	-0,233	-0,154	-0,075	0,004	0,083	0,162	0,241	0,320	0,399
7	-0,237	-0,161	-0,085	-0,009	0,067	0,143	0,219	0,295	0,371
8	-0,239	-0,166	-0,093	-0,020	0,053	0,126	0,199	0,272	0,345
9	-0,242	-0,172	-0,102	-0,031	0,039	0,109	0,179	0,250	0,320
10	-0,245	-0,177	-0,110	-0,042	0,025	0,093	0,160	0,228	0,296
11	-0,248	-0,183	-0,118	-0,053	0,012	0,077	0,142	0,207	0,272
12	-0,250	-0,188	-0,125	-0,063	0,000	0,062	0,125	0,187	0,250
13	-0,252	-0,192	-0,132	-0,072	-0,012	0,048	0,108	0,168	0,228
14	-0,255	-0,197	-0,139	-0,082	-0,024	0,034	0,092	0,149	0,207
15	-0,257	-0,201	-0,146	-0,090	-0,035	0,021	0,076	0,132	0,187
16	-0,259	-0,206	-0,152	-0,099	-0,046	0,008	0,061	0,115	0,168
17	-0,261	-0,210	-0,158	-0,107	-0,056	-0,004	0,047	0,098	0,150
18	-0,263	-0,214	-0,164	-0,115	-0,066	-0,016	0,033	0,082	0,132
19	-0,265	-0,218	-0,170	-0,123	-0,075	-0,028	0,020	0,067	0,115
20	-0,267	-0,221	-0,176	-0,130	-0,084	-0,039	0,007	0,053	0,098
21	-0,269	-0,225	-0,181	-0,137	-0,093	-0,049	-0,005	0,039	0,082
22	-0,270	-0,228	-0,186	-0,144	-0,102	-0,059	-0,017	0,025	0,067
23	-0,272	-0,231	-0,191	-0,150	-0,110	-0,069	-0,028	0,012	0,053
24	-0,273	-0,234	-0,195	-0,156	-0,117	-0,078	-0,039	0,000	0,039
25	-0,275	-0,237	-0,200	-0,162	-0,125	-0,087	-0,050	-0,012	0,025
26	-0,276	-0,240	-0,204	-0,168	-0,132	-0,096	-0,060	-0,024	0,012
27	-0,278	-0,243	-0,208	-0,174	-0,139	-0,104	-0,070	-0,035	0,000
28	-0,279	-0,246	-0,212	-0,179	-0,146	-0,112	-0,079	-0,046	-0,012
29	-0,280	-0,248	-0,216	-0,184	-0,152	-0,120	-0,088	-0,056	-0,024
30	-0,282	-0,251	-0,220	-0,189	-0,158	-0,128	-0,097	-0,066	-0,035
31	-0,283	-0,253	-0,224	-0,194	-0,164	-0,135	-0,105	-0,075	-0,046
32	-0,284	-0,255	-0,227	-0,198	-0,170	-0,141	-0,113	-0,084	-0,056
33	-0,285	-0,258	-0,230	-0,203	-0,175	-0,148	-0,121	-0,093	-0,066
34	-0,286	-0,260	-0,233	-0,207	-0,181	-0,154	-0,128	-0,102	-0,075
35	-0,287	-0,262	-0,236	-0,211	-0,186	-0,160	-0,135	-0,110	-0,084
36	-0,288	-0,264	-0,239	-0,215	-0,191	-0,166	-0,142	-0,118	-0,093
37	-0,289	-0,266	-0,242	-0,219	-0,195	-0,172	-0,148	-0,125	-0,102

NPV

Interest rate	5 %
Extra investment	31,25 %
Investment limit	0

Residual value	0,10	0,20	0,30	0,40	0,50	0,60	0,70	0,80	0,90
Year									
1	-0,217	-0,122	-0,027	0,068	0,164	0,259	0,354	0,449	0,545
2	-0,222	-0,131	-0,040	0,050	0,141	0,232	0,322	0,413	0,504
3	-0,226	-0,140	-0,053	0,033	0,119	0,206	0,292	0,379	0,465
4	-0,230	-0,148	-0,066	0,017	0,099	0,181	0,263	0,346	0,428
5	-0,234	-0,156	-0,077	0,001	0,079	0,158	0,236	0,314	0,393
6	-0,238	-0,163	-0,089	-0,014	0,061	0,135	0,210	0,284	0,359
7	-0,241	-0,170	-0,099	-0,028	0,043	0,114	0,185	0,256	0,327
8	-0,245	-0,177	-0,109	-0,042	0,026	0,094	0,161	0,229	0,297
9	-0,248	-0,184	-0,119	-0,055	0,010	0,074	0,139	0,203	0,268
10	-0,251	-0,190	-0,128	-0,067	-0,006	0,056	0,117	0,179	0,240
11	-0,254	-0,196	-0,137	-0,079	-0,020	0,038	0,097	0,155	0,214
12	-0,257	-0,201	-0,145	-0,090	-0,034	0,022	0,077	0,133	0,189
13	-0,259	-0,206	-0,153	-0,100	-0,047	0,006	0,059	0,112	0,165
14	-0,262	-0,211	-0,161	-0,110	-0,060	-0,009	0,041	0,092	0,142
15	-0,264	-0,216	-0,168	-0,120	-0,072	-0,024	0,024	0,072	0,120
16	-0,267	-0,221	-0,175	-0,129	-0,083	-0,038	0,008	0,054	0,100
17	-0,269	-0,225	-0,182	-0,138	-0,094	-0,051	-0,007	0,037	0,080
18	-0,271	-0,229	-0,188	-0,146	-0,105	-0,063	-0,022	0,020	0,061
19	-0,273	-0,233	-0,194	-0,154	-0,115	-0,075	-0,035	0,004	0,044
20	-0,275	-0,237	-0,199	-0,162	-0,124	-0,086	-0,049	-0,011	0,027
21	-0,277	-0,241	-0,205	-0,169	-0,133	-0,097	-0,061	-0,025	0,011
22	-0,278	-0,244	-0,210	-0,176	-0,142	-0,107	-0,073	-0,039	-0,005
23	-0,280	-0,247	-0,215	-0,182	-0,150	-0,117	-0,085	-0,052	-0,019
24	-0,281	-0,250	-0,219	-0,188	-0,157	-0,126	-0,095	-0,064	-0,033
25	-0,283	-0,253	-0,224	-0,194	-0,165	-0,135	-0,106	-0,076	-0,047
26	-0,284	-0,256	-0,228	-0,200	-0,172	-0,144	-0,116	-0,088	-0,059
27	-0,286	-0,259	-0,232	-0,205	-0,179	-0,152	-0,125	-0,098	-0,071
28	-0,287	-0,261	-0,236	-0,210	-0,185	-0,159	-0,134	-0,108	-0,083
29	-0,288	-0,264	-0,240	-0,215	-0,191	-0,167	-0,142	-0,118	-0,094
30	-0,289	-0,266	-0,243	-0,220	-0,197	-0,174	-0,151	-0,127	-0,104
31	-0,290	-0,268	-0,246	-0,224	-0,202	-0,180	-0,158	-0,136	-0,114
32	-0,292	-0,271	-0,250	-0,229	-0,208	-0,187	-0,166	-0,145	-0,124
33	-0,293	-0,273	-0,253	-0,233	-0,213	-0,193	-0,173	-0,153	-0,133
34	-0,293	-0,274	-0,255	-0,236	-0,217	-0,198	-0,179	-0,160	-0,141
35	-0,294	-0,276	-0,258	-0,240	-0,222	-0,204	-0,186	-0,167	-0,149
36	-0,295	-0,278	-0,261	-0,243	-0,226	-0,209	-0,192	-0,174	-0,157
37	-0,296	-0,280	-0,263	-0,247	-0,230	-0,214	-0,197	-0,181	-0,165

NPV

Interest rate	6 %
Extra investment	31,25 %
Investment limit	0

Residual value	0,10	0,20	0,30	0,40	0,50	0,60	0,70	0,80	0,90
Year									
1	-0,218	-0,124	-0,029	0,065	0,159	0,254	0,348	0,442	0,537
2	-0,224	-0,135	-0,046	0,043	0,132	0,221	0,310	0,399	0,488
3	-0,229	-0,145	-0,061	0,023	0,107	0,191	0,275	0,359	0,443
4	-0,233	-0,154	-0,075	0,004	0,084	0,163	0,242	0,321	0,400
5	-0,238	-0,163	-0,088	-0,014	0,061	0,136	0,211	0,285	0,360
6	-0,242	-0,172	-0,101	-0,031	0,040	0,110	0,181	0,251	0,322
7	-0,246	-0,179	-0,113	-0,046	0,020	0,087	0,153	0,220	0,286
8	-0,250	-0,187	-0,124	-0,062	0,001	0,064	0,127	0,189	0,252
9	-0,253	-0,194	-0,135	-0,076	-0,017	0,043	0,102	0,161	0,220
10	-0,257	-0,201	-0,145	-0,089	-0,033	0,023	0,078	0,134	0,190
11	-0,260	-0,207	-0,154	-0,102	-0,049	0,004	0,056	0,109	0,162
12	-0,263	-0,213	-0,163	-0,114	-0,064	-0,014	0,035	0,085	0,135
13	-0,266	-0,219	-0,172	-0,125	-0,078	-0,031	0,016	0,063	0,109
14	-0,268	-0,224	-0,180	-0,136	-0,091	-0,047	-0,003	0,041	0,086
15	-0,271	-0,229	-0,187	-0,146	-0,104	-0,062	-0,020	0,021	0,063
16	-0,273	-0,234	-0,194	-0,155	-0,116	-0,076	-0,037	0,002	0,042
17	-0,275	-0,238	-0,201	-0,164	-0,127	-0,090	-0,053	-0,015	0,022
18	-0,277	-0,242	-0,207	-0,172	-0,137	-0,102	-0,067	-0,032	0,003
19	-0,279	-0,246	-0,213	-0,180	-0,147	-0,114	-0,081	-0,048	-0,015
20	-0,281	-0,250	-0,219	-0,188	-0,157	-0,125	-0,094	-0,063	-0,032
21	-0,283	-0,254	-0,224	-0,195	-0,165	-0,136	-0,107	-0,077	-0,048
22	-0,285	-0,257	-0,229	-0,201	-0,174	-0,146	-0,118	-0,090	-0,063
23	-0,286	-0,260	-0,234	-0,208	-0,182	-0,155	-0,129	-0,103	-0,077
24	-0,288	-0,263	-0,238	-0,214	-0,189	-0,164	-0,140	-0,115	-0,090
25	-0,289	-0,266	-0,243	-0,219	-0,196	-0,173	-0,149	-0,126	-0,103
26	-0,291	-0,269	-0,247	-0,225	-0,203	-0,181	-0,159	-0,137	-0,115
27	-0,292	-0,271	-0,250	-0,230	-0,209	-0,188	-0,167	-0,147	-0,126
28	-0,293	-0,273	-0,254	-0,234	-0,215	-0,195	-0,176	-0,156	-0,136
29	-0,294	-0,276	-0,257	-0,239	-0,220	-0,202	-0,183	-0,165	-0,146
30	-0,295	-0,278	-0,260	-0,243	-0,225	-0,208	-0,191	-0,173	-0,156
31	-0,296	-0,280	-0,263	-0,247	-0,230	-0,214	-0,198	-0,181	-0,165
32	-0,297	-0,282	-0,266	-0,251	-0,235	-0,220	-0,204	-0,189	-0,173
33	-0,298	-0,283	-0,269	-0,254	-0,239	-0,225	-0,210	-0,196	-0,181
34	-0,299	-0,285	-0,271	-0,257	-0,244	-0,230	-0,216	-0,202	-0,188
35	-0,299	-0,286	-0,273	-0,260	-0,247	-0,234	-0,221	-0,208	-0,195
36	-0,300	-0,288	-0,276	-0,263	-0,251	-0,239	-0,227	-0,214	-0,202
37	-0,301	-0,289	-0,278	-0,266	-0,255	-0,243	-0,231	-0,220	-0,208

Appendix 13. NPV calculations with smaller extra investment

	NPV
Interest rate	1 %
Extra investment	10,00 %
Investment limit	0

Residual value	0,10	0,20	0,30	0,40	0,50	0,60	0,70	0,80	0,90
Year									
1	-0,001	0,098	0,197	0,296	0,395	0,494	0,593	0,692	0,791
2	-0,002	0,096	0,194	0,292	0,390	0,488	0,586	0,684	0,782
3	-0,003	0,094	0,191	0,288	0,385	0,482	0,579	0,676	0,774
4	-0,004	0,092	0,188	0,284	0,380	0,477	0,573	0,669	0,765
5	-0,005	0,090	0,185	0,281	0,376	0,471	0,566	0,661	0,756
6	-0,006	0,088	0,183	0,277	0,371	0,465	0,559	0,654	0,748
7	-0,007	0,087	0,180	0,273	0,366	0,460	0,553	0,646	0,739
8	-0,008	0,085	0,177	0,269	0,362	0,454	0,546	0,639	0,731
9	-0,009	0,083	0,174	0,266	0,357	0,449	0,540	0,631	0,723
10	-0,009	0,081	0,172	0,262	0,353	0,443	0,534	0,624	0,715
11	-0,010	0,079	0,169	0,259	0,348	0,438	0,527	0,617	0,707
12	-0,011	0,077	0,166	0,255	0,344	0,432	0,521	0,610	0,699
13	-0,012	0,076	0,164	0,251	0,339	0,427	0,515	0,603	0,691
14	-0,013	0,074	0,161	0,248	0,335	0,422	0,509	0,596	0,683
15	-0,014	0,072	0,158	0,245	0,331	0,417	0,503	0,589	0,675
16	-0,015	0,071	0,156	0,241	0,326	0,412	0,497	0,582	0,668
17	-0,016	0,069	0,153	0,238	0,322	0,407	0,491	0,576	0,660
18	-0,016	0,067	0,151	0,234	0,318	0,402	0,485	0,569	0,652
19	-0,017	0,066	0,148	0,231	0,314	0,397	0,479	0,562	0,645
20	-0,018	0,064	0,146	0,228	0,310	0,392	0,474	0,556	0,638
21	-0,019	0,062	0,143	0,225	0,306	0,387	0,468	0,549	0,630
22	-0,020	0,061	0,141	0,221	0,302	0,382	0,462	0,543	0,623
23	-0,020	0,059	0,139	0,218	0,298	0,377	0,457	0,536	0,616
24	-0,021	0,058	0,136	0,215	0,294	0,373	0,451	0,530	0,609
25	-0,022	0,056	0,134	0,212	0,290	0,368	0,446	0,524	0,602
26	-0,023	0,054	0,132	0,209	0,286	0,363	0,440	0,518	0,595
27	-0,024	0,053	0,129	0,206	0,282	0,359	0,435	0,512	0,588
28	-0,024	0,051	0,127	0,203	0,278	0,354	0,430	0,505	0,581
29	-0,025	0,050	0,125	0,200	0,275	0,350	0,425	0,499	0,574
30	-0,026	0,048	0,123	0,197	0,271	0,345	0,419	0,494	0,568
31	-0,027	0,047	0,120	0,194	0,267	0,341	0,414	0,488	0,561
32	-0,027	0,045	0,118	0,191	0,264	0,336	0,409	0,482	0,555
33	-0,028	0,044	0,116	0,188	0,260	0,332	0,404	0,476	0,548
34	-0,029	0,043	0,114	0,185	0,256	0,328	0,399	0,470	0,542
35	-0,029	0,041	0,112	0,182	0,253	0,324	0,394	0,465	0,535
36	-0,030	0,040	0,110	0,180	0,249	0,319	0,389	0,459	0,529
37	-0,031	0,038	0,108	0,177	0,246	0,315	0,384	0,454	0,523

NPV

Interest rate	2 %
Extra investment	10,00 %
Investment limit	0

Residual value	0,10	0,20	0,30	0,40	0,50	0,60	0,70	0,80	0,90
Year									
1	-0,002	0,096	0,194	0,292	0,390	0,488	0,586	0,684	0,782
2	-0,004	0,092	0,188	0,284	0,381	0,477	0,573	0,669	0,765
3	-0,006	0,088	0,183	0,277	0,371	0,465	0,560	0,654	0,748
4	-0,008	0,085	0,177	0,270	0,362	0,454	0,547	0,639	0,731
5	-0,009	0,081	0,172	0,262	0,353	0,443	0,534	0,625	0,715
6	-0,011	0,078	0,166	0,255	0,344	0,433	0,522	0,610	0,699
7	-0,013	0,074	0,161	0,248	0,335	0,422	0,509	0,596	0,684
8	-0,015	0,071	0,156	0,241	0,327	0,412	0,497	0,583	0,668
9	-0,016	0,067	0,151	0,235	0,318	0,402	0,486	0,569	0,653
10	-0,018	0,064	0,146	0,228	0,310	0,392	0,474	0,556	0,638
11	-0,020	0,061	0,141	0,222	0,302	0,383	0,463	0,543	0,624
12	-0,021	0,058	0,137	0,215	0,294	0,373	0,452	0,531	0,610
13	-0,023	0,055	0,132	0,209	0,287	0,364	0,441	0,518	0,596
14	-0,024	0,052	0,127	0,203	0,279	0,355	0,431	0,506	0,582
15	-0,026	0,049	0,123	0,197	0,272	0,346	0,420	0,494	0,569
16	-0,027	0,046	0,119	0,191	0,264	0,337	0,410	0,483	0,556
17	-0,029	0,043	0,114	0,186	0,257	0,328	0,400	0,471	0,543
18	-0,030	0,040	0,110	0,180	0,250	0,320	0,390	0,460	0,530
19	-0,031	0,037	0,106	0,175	0,243	0,312	0,381	0,449	0,518
20	-0,033	0,035	0,102	0,169	0,236	0,304	0,371	0,438	0,506
21	-0,034	0,032	0,098	0,164	0,230	0,296	0,362	0,428	0,494
22	-0,035	0,029	0,094	0,159	0,223	0,288	0,353	0,417	0,482
23	-0,037	0,027	0,090	0,154	0,217	0,280	0,344	0,407	0,471
24	-0,038	0,024	0,087	0,149	0,211	0,273	0,335	0,397	0,460
25	-0,039	0,022	0,083	0,144	0,205	0,266	0,327	0,388	0,449
26	-0,040	0,020	0,079	0,139	0,199	0,259	0,318	0,378	0,438
27	-0,041	0,017	0,076	0,134	0,193	0,252	0,310	0,369	0,427
28	-0,043	0,015	0,072	0,130	0,187	0,245	0,302	0,359	0,417
29	-0,044	0,013	0,069	0,125	0,182	0,238	0,294	0,350	0,407
30	-0,045	0,010	0,066	0,121	0,176	0,231	0,286	0,342	0,397
31	-0,046	0,008	0,062	0,116	0,171	0,225	0,279	0,333	0,387
32	-0,047	0,006	0,059	0,112	0,165	0,218	0,271	0,325	0,378
33	-0,048	0,004	0,056	0,108	0,160	0,212	0,264	0,316	0,368
34	-0,049	0,002	0,053	0,104	0,155	0,206	0,257	0,308	0,359
35	-0,050	0,000	0,050	0,100	0,150	0,200	0,250	0,300	0,350
36	-0,051	-0,002	0,047	0,096	0,145	0,194	0,243	0,292	0,341
37	-0,052	-0,004	0,044	0,092	0,140	0,188	0,236	0,284	0,333

NPV

Interest rate	3 %
Extra investment	10,00 %
Investment limit	0

Residual value	0,10	0,20	0,30	0,40	0,50	0,60	0,70	0,80	0,90
Year									
1	-0,003	0,094	0,191	0,288	0,385	0,483	0,580	0,677	0,774
2	-0,006	0,089	0,183	0,277	0,371	0,466	0,560	0,654	0,748
3	-0,008	0,083	0,175	0,266	0,358	0,449	0,541	0,632	0,724
4	-0,011	0,078	0,167	0,255	0,344	0,433	0,522	0,611	0,700
5	-0,014	0,073	0,159	0,245	0,331	0,418	0,504	0,590	0,676
6	-0,016	0,067	0,151	0,235	0,319	0,402	0,486	0,570	0,654
7	-0,019	0,063	0,144	0,225	0,307	0,388	0,469	0,550	0,632
8	-0,021	0,058	0,137	0,216	0,295	0,374	0,453	0,532	0,610
9	-0,023	0,053	0,130	0,207	0,283	0,360	0,436	0,513	0,590
10	-0,026	0,049	0,123	0,198	0,272	0,346	0,421	0,495	0,570
11	-0,028	0,044	0,117	0,189	0,261	0,333	0,406	0,478	0,550
12	-0,030	0,040	0,110	0,181	0,251	0,321	0,391	0,461	0,531
13	-0,032	0,036	0,104	0,172	0,240	0,309	0,377	0,445	0,513
14	-0,034	0,032	0,098	0,164	0,231	0,297	0,363	0,429	0,495
15	-0,036	0,028	0,093	0,157	0,221	0,285	0,349	0,413	0,478
16	-0,038	0,025	0,087	0,149	0,212	0,274	0,336	0,399	0,461
17	-0,039	0,021	0,082	0,142	0,203	0,263	0,324	0,384	0,445
18	-0,041	0,017	0,076	0,135	0,194	0,252	0,311	0,370	0,429
19	-0,043	0,014	0,071	0,128	0,185	0,242	0,299	0,356	0,413
20	-0,045	0,011	0,066	0,121	0,177	0,232	0,288	0,343	0,398
21	-0,046	0,008	0,061	0,115	0,169	0,223	0,276	0,330	0,384
22	-0,048	0,004	0,057	0,109	0,161	0,213	0,265	0,318	0,370
23	-0,049	0,001	0,052	0,103	0,153	0,204	0,255	0,305	0,356
24	-0,051	-0,002	0,048	0,097	0,146	0,195	0,244	0,294	0,343
25	-0,052	-0,004	0,043	0,091	0,139	0,187	0,234	0,282	0,330
26	-0,054	-0,007	0,039	0,085	0,132	0,178	0,225	0,271	0,317
27	-0,055	-0,010	0,035	0,080	0,125	0,170	0,215	0,260	0,305
28	-0,056	-0,013	0,031	0,075	0,119	0,162	0,206	0,250	0,293
29	-0,058	-0,015	0,027	0,070	0,112	0,155	0,197	0,239	0,282
30	-0,059	-0,018	0,024	0,065	0,106	0,147	0,188	0,230	0,271
31	-0,060	-0,020	0,020	0,060	0,100	0,140	0,180	0,220	0,260
32	-0,061	-0,022	0,017	0,055	0,094	0,133	0,172	0,211	0,250
33	-0,062	-0,025	0,013	0,051	0,089	0,126	0,164	0,202	0,239
34	-0,063	-0,027	0,010	0,046	0,083	0,120	0,156	0,193	0,229
35	-0,064	-0,029	0,007	0,042	0,078	0,113	0,149	0,184	0,220
36	-0,065	-0,031	0,004	0,038	0,073	0,107	0,142	0,176	0,211
37	-0,067	-0,033	0,000	0,034	0,067	0,101	0,134	0,168	0,201

NPV

Interest rate	4 %
Extra investment	10,00 %
Investment limit	0

Residual value	0,10	0,20	0,30	0,40	0,50	0,60	0,70	0,80	0,90
Year									
1	-0,004	0,092	0,188	0,285	0,381	0,477	0,573	0,669	0,765
2	-0,008	0,085	0,177	0,270	0,362	0,455	0,547	0,640	0,732
3	-0,011	0,078	0,167	0,256	0,344	0,433	0,522	0,611	0,700
4	-0,015	0,071	0,156	0,242	0,327	0,413	0,498	0,584	0,669
5	-0,018	0,064	0,147	0,229	0,311	0,393	0,475	0,558	0,640
6	-0,021	0,058	0,137	0,216	0,295	0,374	0,453	0,532	0,611
7	-0,024	0,052	0,128	0,204	0,280	0,356	0,432	0,508	0,584
8	-0,027	0,046	0,119	0,192	0,265	0,338	0,411	0,485	0,558
9	-0,030	0,041	0,111	0,181	0,251	0,322	0,392	0,462	0,532
10	-0,032	0,035	0,103	0,170	0,238	0,305	0,373	0,440	0,508
11	-0,035	0,030	0,095	0,160	0,225	0,290	0,355	0,420	0,485
12	-0,038	0,025	0,087	0,150	0,212	0,275	0,337	0,400	0,462
13	-0,040	0,020	0,080	0,140	0,200	0,260	0,320	0,380	0,441
14	-0,042	0,015	0,073	0,131	0,189	0,246	0,304	0,362	0,420
15	-0,044	0,011	0,067	0,122	0,178	0,233	0,289	0,344	0,400
16	-0,047	0,007	0,060	0,114	0,167	0,220	0,274	0,327	0,381
17	-0,049	0,003	0,054	0,105	0,157	0,208	0,259	0,311	0,362
18	-0,051	-0,001	0,048	0,097	0,147	0,196	0,246	0,295	0,344
19	-0,053	-0,005	0,042	0,090	0,137	0,185	0,232	0,280	0,327
20	-0,054	-0,009	0,037	0,083	0,128	0,174	0,219	0,265	0,311
21	-0,056	-0,012	0,032	0,076	0,119	0,163	0,207	0,251	0,295
22	-0,058	-0,016	0,027	0,069	0,111	0,153	0,195	0,238	0,280
23	-0,059	-0,019	0,022	0,062	0,103	0,143	0,184	0,225	0,265
24	-0,061	-0,022	0,017	0,056	0,095	0,134	0,173	0,212	0,251
25	-0,062	-0,025	0,013	0,050	0,088	0,125	0,163	0,200	0,238
26	-0,064	-0,028	0,008	0,044	0,080	0,116	0,152	0,189	0,225
27	-0,065	-0,031	0,004	0,039	0,073	0,108	0,143	0,177	0,212
28	-0,067	-0,033	0,000	0,033	0,067	0,100	0,133	0,167	0,200
29	-0,068	-0,036	-0,004	0,028	0,060	0,092	0,124	0,157	0,189
30	-0,069	-0,038	-0,008	0,023	0,054	0,085	0,116	0,147	0,177
31	-0,070	-0,041	-0,011	0,019	0,048	0,078	0,108	0,137	0,167
32	-0,071	-0,043	-0,014	0,014	0,043	0,071	0,100	0,128	0,157
33	-0,073	-0,045	-0,018	0,010	0,037	0,064	0,092	0,119	0,147
34	-0,074	-0,047	-0,021	0,005	0,032	0,058	0,084	0,111	0,137
35	-0,075	-0,049	-0,024	0,001	0,027	0,052	0,077	0,103	0,128
36	-0,076	-0,051	-0,027	-0,003	0,022	0,046	0,071	0,095	0,119
37	-0,077	-0,053	-0,030	-0,006	0,017	0,041	0,064	0,087	0,111

NPV

Interest rate	5 %
Extra investment	10,00 %
Investment limit	0

Residual value	0,10	0,20	0,30	0,40	0,50	0,60	0,70	0,80	0,90
Year									
1	-0,005	0,090	0,186	0,281	0,376	0,471	0,567	0,662	0,757
2	-0,009	0,081	0,172	0,263	0,354	0,444	0,535	0,626	0,716
3	-0,014	0,073	0,159	0,246	0,332	0,418	0,505	0,591	0,677
4	-0,018	0,065	0,147	0,229	0,311	0,394	0,476	0,558	0,640
5	-0,022	0,057	0,135	0,213	0,292	0,370	0,448	0,527	0,605
6	-0,025	0,049	0,124	0,198	0,273	0,348	0,422	0,497	0,572
7	-0,029	0,042	0,113	0,184	0,255	0,326	0,397	0,469	0,540
8	-0,032	0,035	0,103	0,171	0,238	0,306	0,374	0,441	0,509
9	-0,036	0,029	0,093	0,158	0,222	0,287	0,351	0,416	0,480
10	-0,039	0,023	0,084	0,146	0,207	0,268	0,330	0,391	0,453
11	-0,042	0,017	0,075	0,134	0,192	0,251	0,309	0,368	0,426
12	-0,044	0,011	0,067	0,123	0,178	0,234	0,290	0,345	0,401
13	-0,047	0,006	0,059	0,112	0,165	0,218	0,271	0,324	0,377
14	-0,049	0,001	0,052	0,102	0,153	0,203	0,254	0,304	0,355
15	-0,052	-0,004	0,044	0,092	0,141	0,189	0,237	0,285	0,333
16	-0,054	-0,008	0,037	0,083	0,129	0,175	0,221	0,266	0,312
17	-0,056	-0,013	0,031	0,075	0,118	0,162	0,205	0,249	0,293
18	-0,058	-0,017	0,025	0,066	0,108	0,149	0,191	0,232	0,274
19	-0,060	-0,021	0,019	0,058	0,098	0,137	0,177	0,217	0,256
20	-0,062	-0,025	0,013	0,051	0,088	0,126	0,164	0,202	0,239
21	-0,064	-0,028	0,008	0,044	0,079	0,115	0,151	0,187	0,223
22	-0,066	-0,032	0,003	0,037	0,071	0,105	0,139	0,173	0,208
23	-0,067	-0,035	-0,002	0,030	0,063	0,095	0,128	0,160	0,193
24	-0,069	-0,038	-0,007	0,024	0,055	0,086	0,117	0,148	0,179
25	-0,070	-0,041	-0,011	0,018	0,048	0,077	0,107	0,136	0,166
26	-0,072	-0,044	-0,016	0,012	0,041	0,069	0,097	0,125	0,153
27	-0,073	-0,046	-0,020	0,007	0,034	0,061	0,087	0,114	0,141
28	-0,074	-0,049	-0,023	0,002	0,028	0,053	0,079	0,104	0,130
29	-0,076	-0,051	-0,027	-0,003	0,021	0,046	0,070	0,094	0,119
30	-0,077	-0,054	-0,031	-0,007	0,016	0,039	0,062	0,085	0,108
31	-0,078	-0,056	-0,034	-0,012	0,010	0,032	0,054	0,076	0,098
32	-0,079	-0,058	-0,037	-0,016	0,005	0,026	0,047	0,068	0,089
33	-0,080	-0,060	-0,040	-0,020	0,000	0,020	0,040	0,060	0,080
34	-0,081	-0,062	-0,043	-0,024	-0,005	0,014	0,033	0,052	0,071
35	-0,082	-0,064	-0,046	-0,027	-0,009	0,009	0,027	0,045	0,063
36	-0,083	-0,065	-0,048	-0,031	-0,014	0,004	0,021	0,038	0,055
37	-0,084	-0,067	-0,051	-0,034	-0,018	-0,001	0,015	0,032	0,048

NPV

Interest rate	6 %
Extra investment	10,00 %
Investment limit	0

Residual value	0,10	0,20	0,30	0,40	0,50	0,60	0,70	0,80	0,90
Year									
1	-0,006	0,089	0,183	0,277	0,372	0,466	0,560	0,655	0,749
2	-0,011	0,078	0,167	0,256	0,345	0,434	0,523	0,612	0,701
3	-0,016	0,068	0,152	0,236	0,320	0,404	0,488	0,572	0,656
4	-0,021	0,058	0,138	0,217	0,296	0,375	0,454	0,534	0,613
5	-0,025	0,049	0,124	0,199	0,274	0,348	0,423	0,498	0,573
6	-0,030	0,041	0,111	0,182	0,252	0,323	0,393	0,464	0,534
7	-0,033	0,033	0,100	0,166	0,233	0,299	0,366	0,432	0,499
8	-0,037	0,025	0,088	0,151	0,214	0,276	0,339	0,402	0,465
9	-0,041	0,018	0,078	0,137	0,196	0,255	0,314	0,374	0,433
10	-0,044	0,012	0,068	0,123	0,179	0,235	0,291	0,347	0,403
11	-0,047	0,005	0,058	0,111	0,163	0,216	0,269	0,321	0,374
12	-0,050	-0,001	0,049	0,099	0,148	0,198	0,248	0,298	0,347
13	-0,053	-0,006	0,041	0,088	0,134	0,181	0,228	0,275	0,322
14	-0,056	-0,012	0,033	0,077	0,121	0,165	0,210	0,254	0,298
15	-0,058	-0,017	0,025	0,067	0,109	0,150	0,192	0,234	0,276
16	-0,061	-0,021	0,018	0,057	0,097	0,136	0,176	0,215	0,254
17	-0,063	-0,026	0,011	0,049	0,086	0,123	0,160	0,197	0,234
18	-0,065	-0,030	0,005	0,040	0,075	0,110	0,145	0,180	0,215
19	-0,067	-0,034	-0,001	0,032	0,065	0,098	0,131	0,164	0,197
20	-0,069	-0,038	-0,006	0,025	0,056	0,087	0,118	0,149	0,181
21	-0,071	-0,041	-0,012	0,018	0,047	0,076	0,106	0,135	0,165
22	-0,072	-0,044	-0,017	0,011	0,039	0,067	0,094	0,122	0,150
23	-0,074	-0,048	-0,021	0,005	0,031	0,057	0,083	0,109	0,136
24	-0,075	-0,051	-0,026	-0,001	0,023	0,048	0,073	0,098	0,122
25	-0,077	-0,053	-0,030	-0,007	0,016	0,040	0,063	0,086	0,110
26	-0,078	-0,056	-0,034	-0,012	0,010	0,032	0,054	0,076	0,098
27	-0,079	-0,059	-0,038	-0,017	0,004	0,024	0,045	0,066	0,087
28	-0,080	-0,061	-0,041	-0,022	-0,002	0,017	0,037	0,057	0,076
29	-0,082	-0,063	-0,045	-0,026	-0,008	0,011	0,029	0,048	0,066
30	-0,083	-0,065	-0,048	-0,030	-0,013	0,004	0,022	0,039	0,057
31	-0,084	-0,067	-0,051	-0,034	-0,018	-0,001	0,015	0,031	0,048
32	-0,085	-0,069	-0,054	-0,038	-0,023	-0,007	0,008	0,024	0,039
33	-0,085	-0,071	-0,056	-0,042	-0,027	-0,012	0,002	0,017	0,032
34	-0,086	-0,072	-0,059	-0,045	-0,031	-0,017	-0,003	0,010	0,024
35	-0,087	-0,074	-0,061	-0,048	-0,035	-0,022	-0,009	0,004	0,017
36	-0,088	-0,075	-0,063	-0,051	-0,039	-0,026	-0,014	-0,002	0,010
37	-0,088	-0,077	-0,065	-0,054	-0,042	-0,031	-0,019	-0,007	0,004

Appendix 14. Interviews

Interview study 10.1.2019

City of Helsinki

Interviewer: Olli-Pekka Pajala

Questions about reuse perspective in buildings. (Interview done in Finnish, questions translated)

- What has been the main motive in the construction of the Hakaniemi's temporary hall?
- Area of the building?
- Owner of the building?
- What kind of contract has been made for the construction and disassembly?
- Who has designed the building?
- Who has built the building?
- Were the costs of the temporary building higher than in traditional building? Material, construction, design
- Why it was built high quality temporary building when compared for barrack building?
- Are there some quality differences when compared to "traditional" building?
- Is it more economic to deconstruct the building so that the parts are reusable when compared to destructive demolition and recycling?
- What factors affected the designing the building so that it is possible to deconstruct and transfer to a new place?
- What parts are reusable?
- Is there need for tests for the building parts after the deconstruction?
- How the possible reuse will work from the legislative perspective? Does the CE-markings and DoP remain the same?
- Was the overall economic feasibility estimated? Temporary building compared to temporary spaces?
- Is it at the moment economically feasible to design the building for easy deconstruction and that way to enable its reuse?
- How the tenants / shopkeepers have experienced the new spaces?
- How the customers and citizens have experienced the new spaces?
- What building material should be favoured in reuse projects?
- Is there some kind of time limit, which would support to design and deconstruct the building without damage?

Interview study 17.1.2019

Lehto Group

Interviewer: Olli-Pekka Pajala

Questions about reuse perspective in buildings. (Interview done in Finnish, questions translated)

- What has been the main motive in the construction of the temporary shopping center, Pikkulaiva?
- Area of the building?
- Owner of the building?
- What kind of contract has been made for the construction and disassembly?
- Who has designed the building?
- Who has built the building?
- Were the costs of the temporary building higher than in traditional building? Material, construction, design
- Why it was built high quality temporary building when compared for barrack building?
- Are there some quality differences when compared to “traditional” building?
- Is it more economic to deconstruct the building so that the parts are reusable when compared to destructive demolition and recycling?
- What factors affected the designing the building so that it is possible to deconstruct and transfer to a new place?
- What parts are reusable?
- Is there need for tests for the building parts after the deconstruction?
- How the possible reuse will work from the legislative perspective? Does the CE-markings and DoP remain the same?
- Was the overall economic feasibility estimated? Temporary building compared to temporary spaces?
- Is it at the moment economically feasible to design the building for easy deconstruction and that way to enable its reuse?
- Has there been calculations / thoughts for the building’s residual value?
- How the tenants / shopkeepers have experienced the new spaces?
- How the customers and citizens have experienced the new spaces?
- What building material should be favoured in reuse projects?
- Is there some kind of time limit, which would support to design and deconstruct the building without damage?