EQUALJOINTS PLUS

Valorisation of knowledge for European preQUALified steel JOINTS

European Commission

Equaljoints Plus

Valorisation of knowledge for European preQUALified steel JOINTS

APP MANUAL

Version 1.0.0 (25)

TABLE OF CONTENTS

1. EQUALJOINTS

1.1 About

This project aims at the valorisation and the dissemination of the results achieved within the recently completed RFCS project EQUALJOINTS, where seismic prequalification of steel joints has been developed.
In order to fully exploit the potential of the European prequalification charts, design-oriented documents (guidelines, handbook, tools and design examples) will be produced in 12 different languages, and distributed among the partners of steel construction sectors, including all academic institutions, engineers and construction companies. A software and an app for mobile to predict the inelastic response of joints will be developed. Moreover, workshops and seminars will be organized all over Europe and in USA for presenting material and sharing knowledge.

The organizations who participated in the EQUALJOINTS plus project were:

Università degli Studi di Napoli Federico II (UNINA)
Corso Umberto I 40 – 80138 Napoli, Italia
www.unina.it

Imperial College (IC)
London SW7 2AZ, UK
www.imperial.ac.uk

Universidade de Coimbra (UC)
Paço das Escolas, Coimbra, 3001 451, Portugal
www.uc.pt

Université de Liège (ULg)
Place du 20-Août, 7, B-4000 Liège, Belgique
www.uliege.be

Universitatea Politehnica Timişoara (UPT)
Piaţa Victoriei Nr. 2, 300006 Timişoara, jud. Timiş, România
www.upt.ro

European Convention for Constructional Steelwork (ECCS)
Anenue des Ombrages 32, bte 20, 1200 Brussels, Belgique
www.steelconstruct.com

ArcelorMittal Belval & Differdange S.A. (AMBD)
24-26, Boulevard d'Avranches, L-1160 Luxembourg
www.arcelormittal.com

Università degli Studi di Salerno (UNISA)
Via Giovanni Paolo II, 132 – 84084, Italia
www.unisa.it

České vysoké učení technické v Praze (CVUT)
Zikova 1903/4, 166 36 Praha 6, Česká republika
www.cvut.cz
National Technical University of Athens (NTUA)
Zografou Campus 9, Iroon Polytechniou str, 15780 Zografou, Greece

www.ntua.gr

Reinisch Westfälische Technische Hochschule Aachen (RWTHA)
Templergraben 55, 52062 Aachen, Germany
www.rwth-aachen.de

Centre Technique Industriel de la Construction Métallique (CTICM)
Espace technologique L'orme des merisiers, Immeuble Apollo, 91193 Saint-Aubin, France
www.cticm.com

Technishe Universiteit Delft (TUD)
Postbus 5, 2600 AA Delft, Nederland
www.tudelft.nl

Univerza V Ljubljani (UL)
Kongresni trg 12, 1000 Ljubljana, Slovenija
www.uni-lj.si

Universitet Po Architektura Stroitelstvo I Geodezija (UASG)
Blvd. Hristo Smirnenski 1, 1164 Sofia, Bulgaria
www.uacg.bg

Universitat Politècnica de Catalunya (UPC)
Calle Jordi Girona 31, Barcelona 08034, España
www.upc.edu

OneSource Consultoria nformática
Urbanização Ferreira Jorge – 1º dto Lote 14, Coimbra 3040 016, Portugal
www.onesource.pt

1.2 Dissemination

1.2.1 Mobile app

A user friendly mobile app, with the implementation of the calculation algorithm in operative systems Android and iOS, which provides an extension of the EQUALJOINTS tools for quick and reliable calculation and verification of seismic response of steel joints.

This app will also allow the access to the experimental database developed in the EQUALJOINTS project.

1.2.2 YouTube Channel

A YouTube channel was created to make available the videos of the experimental tests and simulations to show the evolution of damage pattern. Find all the videos here.

1.2.3 Database

To access to experimental database of EQUALJOINTS click here and input your login credentials.

2. ABOUT ECCS

2.1 Aims and Objectives

The **European Convention for Constructional Steelwork (ECCS)** is an international federation of national steelwork associations established in 1955.

The aim of **ECCS** is to promote the use of steelwork in the construction sector by the development of standards and promotional information. It also helps to influence decision makers through the management of working committees, publications, conferences, and by active representation on European and International Committees dealing with standardization, research and development and education.

ECCS brings together all the stakeholder of the Steel Construction Industry: Steel Producers, Steel Fabricators, Steel Stockholders, Suppliers of the Construction Sector, Designers (Architects and Engineers) and the Academic and R&D world through an international network of construction representatives, steel producers, and technical centers. Its Headquarters are located in Brussels, Belgium.

2.2 Membership

ECCS has the following categories of membership:

- Full Members, consisting of European national associations active in the field of steel construction;
- **International Members**, consisting of non-European national associations or other non-European organisations active in the field of steel construction;
- **Supporting Members**, consisting of International associations which represent raw material suppliers or other organisations concerned with or related to the use of structural steel and related building materials;
- **Associate Members**, consisting of European organisations that operate as Technical Institutions or Independent Promotion Organisations with interests in constructional steelwork and its application to the Construction market;
- **Individual Members**, consisting of anyone interested in subjects regarding Steel Construction and in supporting the Association's objectives;

Individual membership is open worldwide to all architects, engineers or anyone interested in steel construction subjects and in supporting the ECCS's objectives. Individual Members are part of a large international network and benefit from various services.

Individual membership is open worldwide to all architects, engineers or anyone interested in steel construction objectives and in supporting the ECCS objectives. Find additional information at www.steelconstruct.com.

Note: To subscribe to ECCS newsletter, click here.

2.3 STEEL CONSTRUCTION: Design & Research

The journal "Steel Construction, *Design and Research*" is the official journal of ECCS and is published quarterly in cooperation with Ernst & Sohn (a Wiley company).

Steel Construction brings together in one journal all the various aspects of steel construction. In the interest of "construction without depletion", it skillfully combines

steel with other forms of construction using concrete, glass, cables and membranes to form integrated steelwork systems. This journal is aimed at all structural engineers, architects, and other professionals working in the field of steel construction, whether active in research or practice.

2.4 Technical guidance on the use of the Eurocodes

ECCS publishes guidance on the use of the Structural Eurocodes. The **ECCS Eurocode Design Manuals** offer detailed information on the application of the various parts of Eurocodes 3 (Steel Structures), 4 (Steel-concrete composite structures) and 8 (Seismic design of steel and composite structures) in a design oriented approach that includes numerous design examples.

The following **ECCS Eurocode Design Manuals** are available or in preparation:

- Design of Steel Structures – Eurocode 3, part 1-1 – 2nd Edition,
- Design of Steel Structures – UK Edition;
- Fire Design of Steel Structures – Eurocode 1, part 1.2 and Eurocode 3, part 1.2 – 2nd Edition,
- Design of Plated Structures – Eurocode 3, part 1-5,
- Fatigue Design of Steel Structures – Eurocode 3, part 1-9 and part 1-10,
- Design of Cold-Formed Steel Structures – Eurocode 3, part 1-3,
- Design of Connections in Steel and Composite Structures – Eurocode 3, part 1.8 and Eurocode 4, part 1-1,
- Design of Joints in Steel Structures – UK Edition
- Design of Composite Structures, Eurocode 4, part 1-1,
- Fire Design of Composite Structures, Eurocode 4, part 1.2,
- Design of Steel Structures for Buildings in Seismic Areas, Eurocode 8, part 1.

ECCS also publishes extensive background guidance on all aspects relevant for steel construction. All this can be easily found in the **ECCS Online Bookstore**.

3. USING THE APPLICATION

3.1 Scope

EQUALJOINTS calculator provides a database of seismically prequalified steel joints and also calculates the resistance of beam-to-column joints according to EC3-1-8 [1].

The following verifications are considered:

- Resistance in bending
- Rigidity in bending
- Resistance in shear
- Ductility

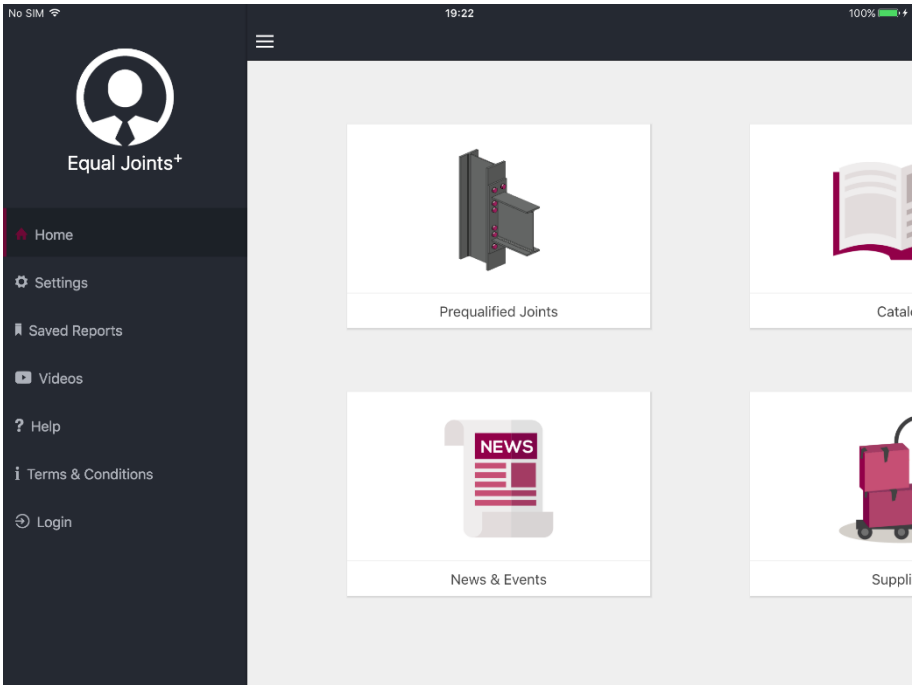

The database of steel products and respective suppliers is described in Section 3.3.

Examples and instructions how to use the application for resistance calculation are given in Section 3.4. A description of its technical background is presented in Section 4. The Design Manual for Seismically prequalified steel joints [2] gives a detailed description of the procedures. EQUALJOINTS calculator covers bolted extended unstiffened end-plate joints, bolted extended stiffened end-plate joints, bolted haunched joints and welded dog-bone joints. The application is free.

In the Configurations section, see Section 3.2, the user may change he main default values for more convenient values.

For suggestions and/or comments regarding the application, please click here.

3.2 Configurations

General

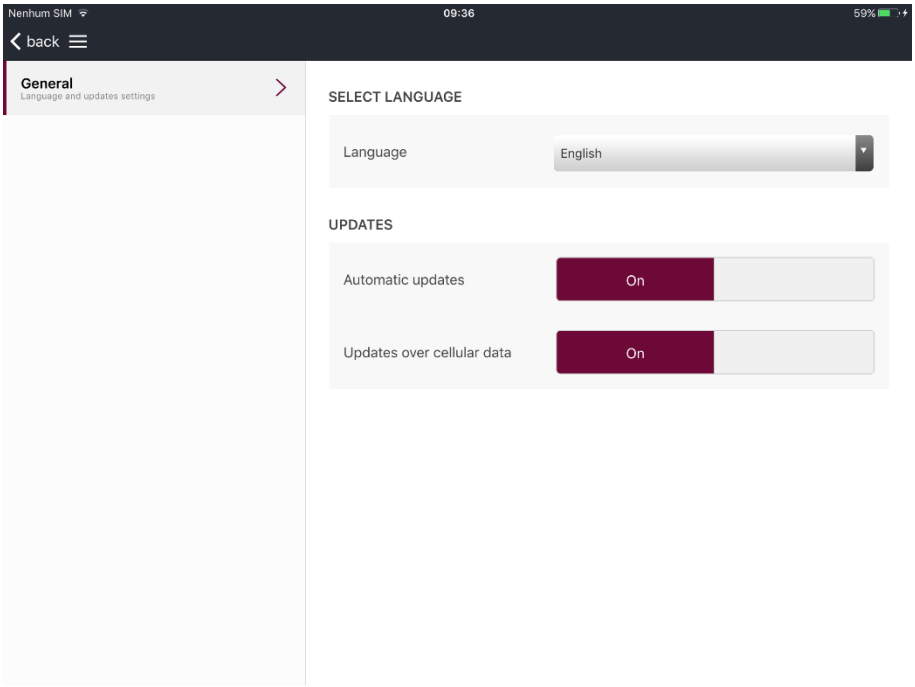

Language

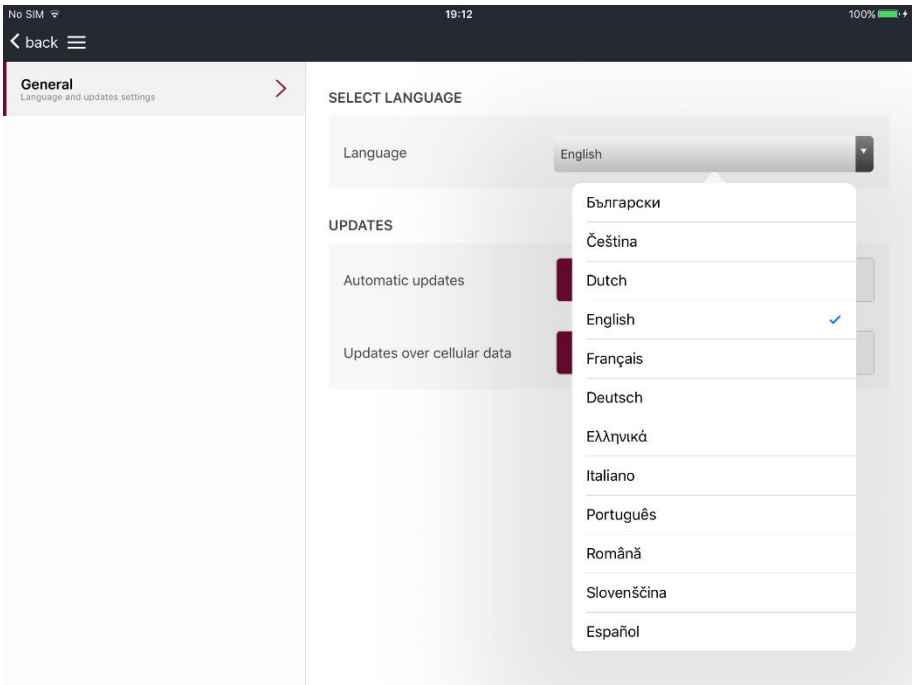

3.3 Catalog and suppliers

The catalog is organized in several categories and sub-categories, until the required item is met. In case the item is presented in the “Calculator” section of the application – e.g. I sections – the respective layout allows automatically for calculation.

Steeps for obtaining information on category I sections is illustrated below.

A. Steel profiles and plating

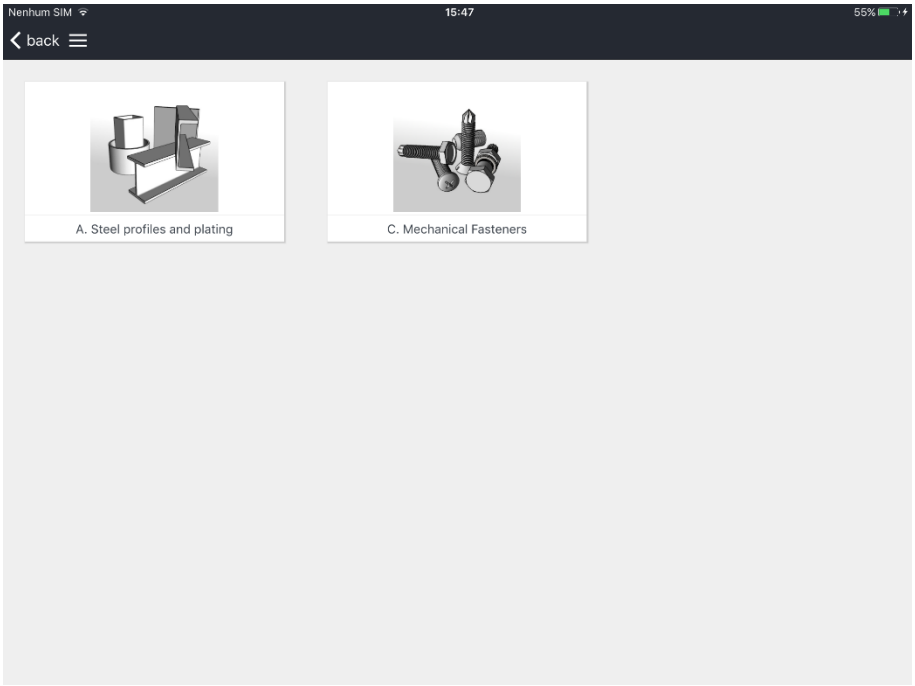

A.1 Rolled sections

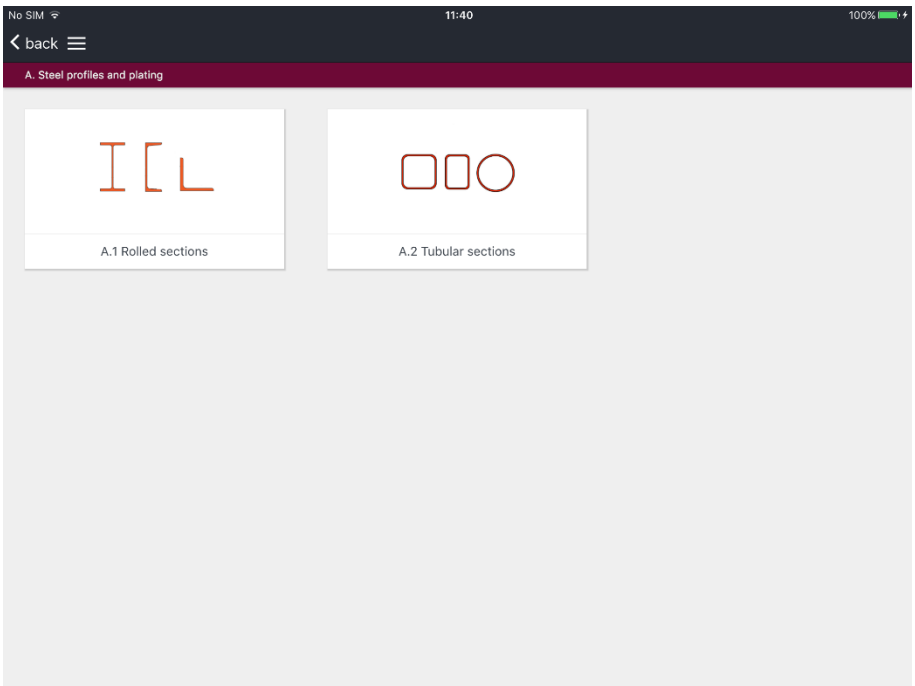

I or H sections

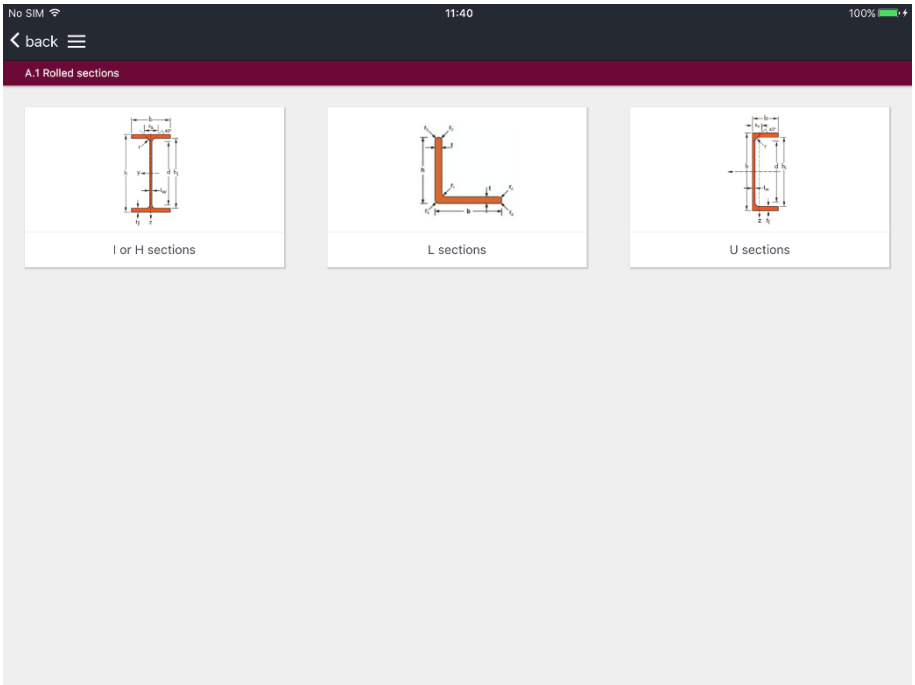
No SIM
11:40
100%
back
A.1 Rolled sections
I or H sections
L sections
U sections

IPE

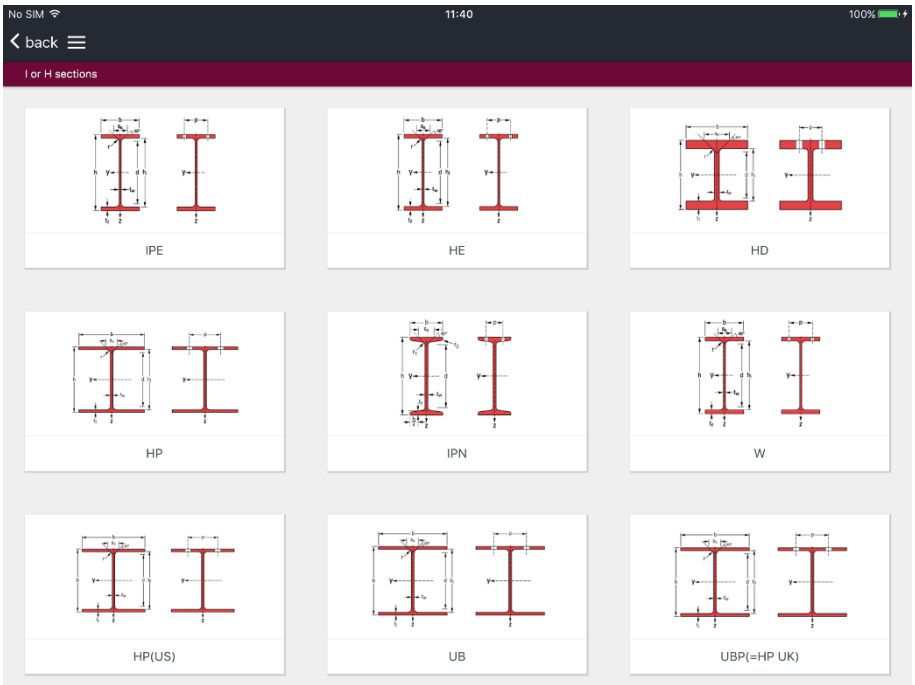
No SIM
11:40
100%
back
I or H sections
IPE
HE
HD
HP
IPN
W
HP(US)
UB
UBP(=HP UK)

IPE 100

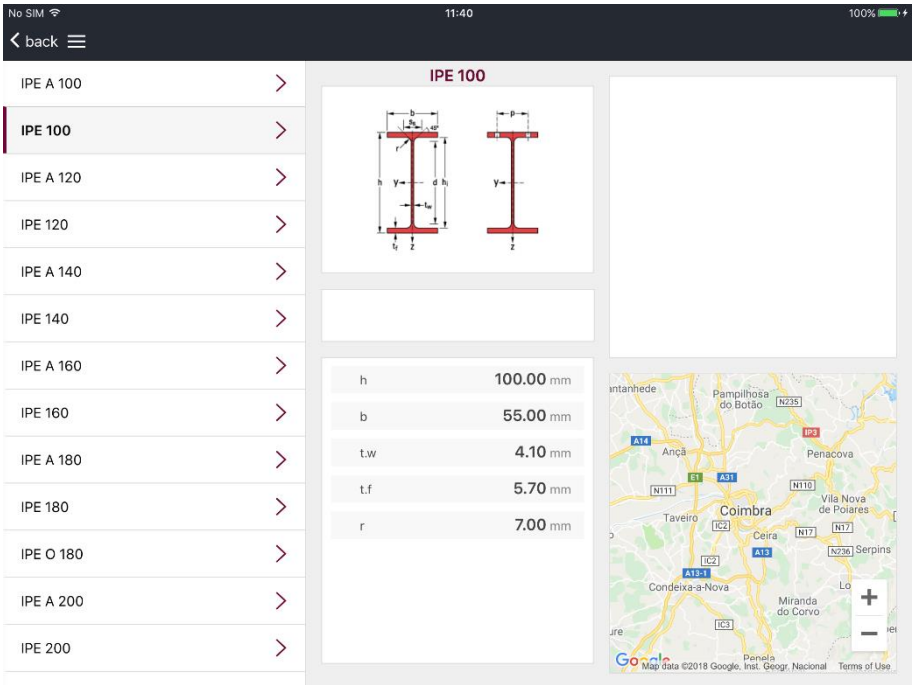

In the item window, information of the suppliers that provide such product is given ad redirects automatically the user to the “Suppliers” section.

Suppliers section gives information about the suppliers and corresponding delegations of the applications products.

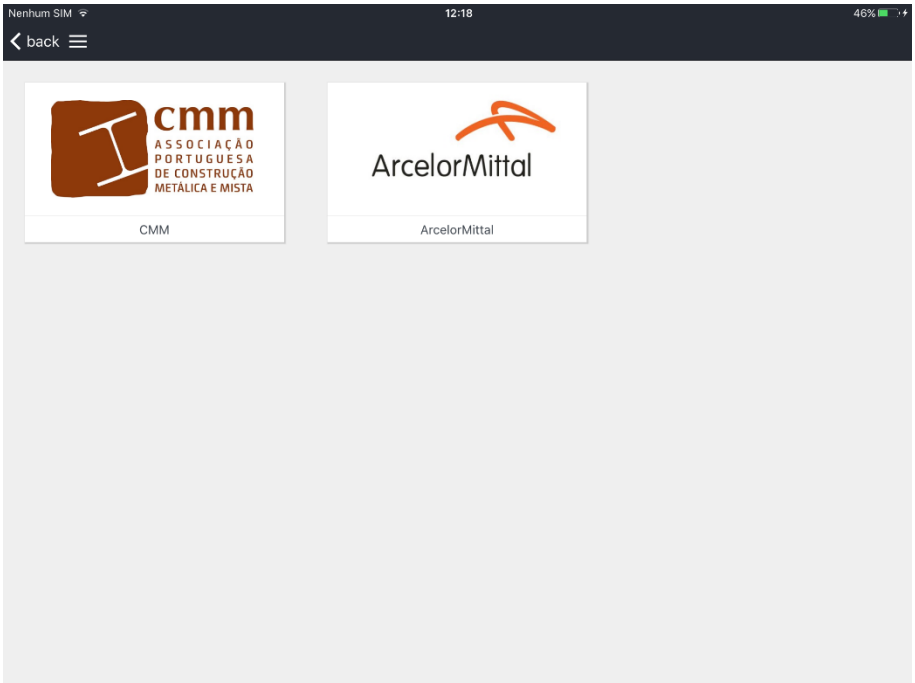

3.4 Examples and Reports – Calculator

3.4.1 Introduction

3 main steps are needed to obtain resistance results

- Select the cross section;
- Select the node configuration;
- Select the steel grade for each member;
- The results are obtained in the results section. A calculation report is automatically generated that can be sent by e-mail or saved locally.

3.4.2 Joints

Interface

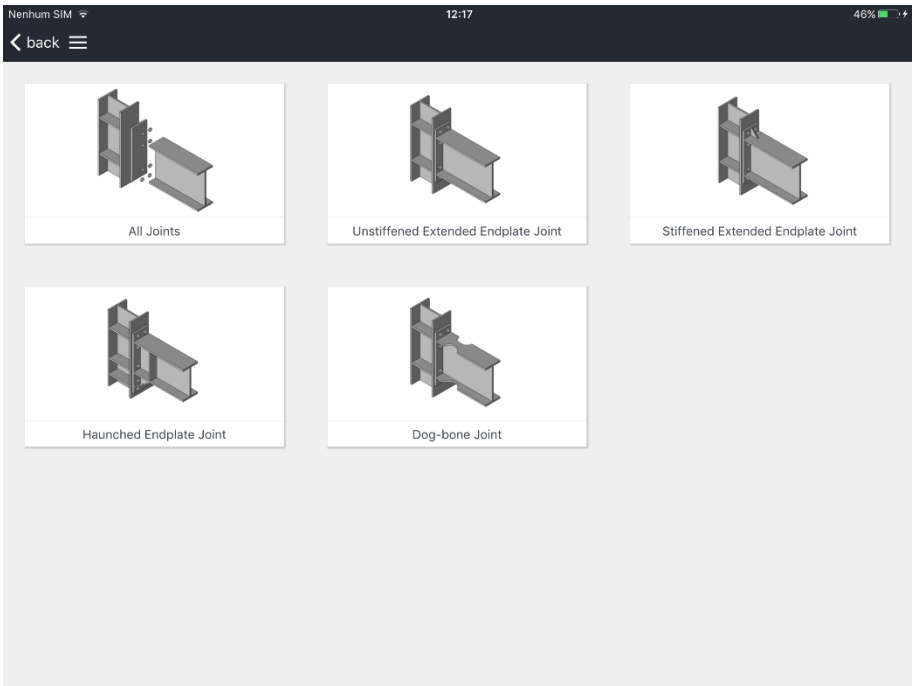

Calculator

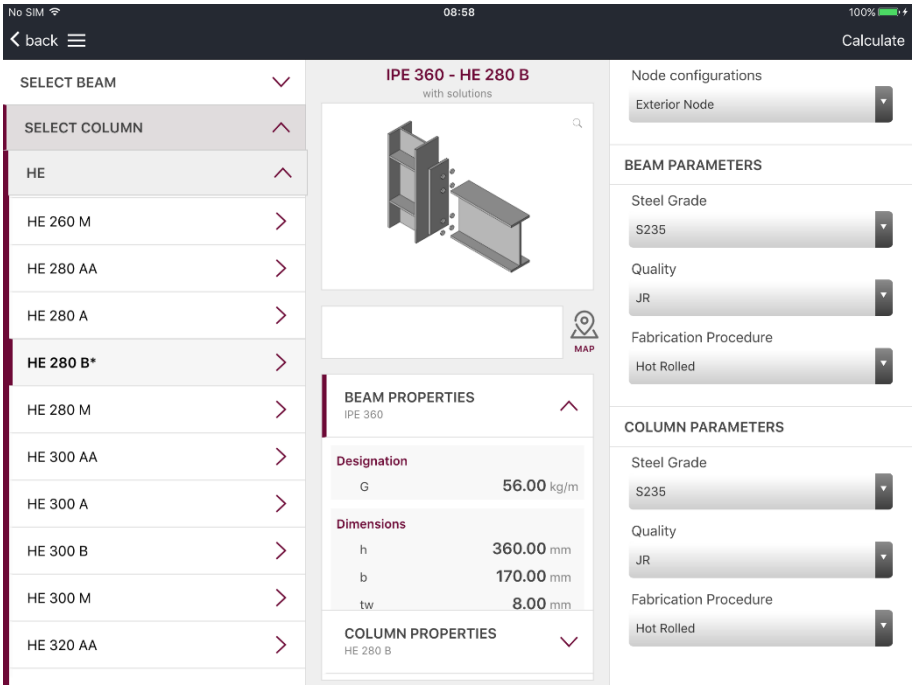

Results

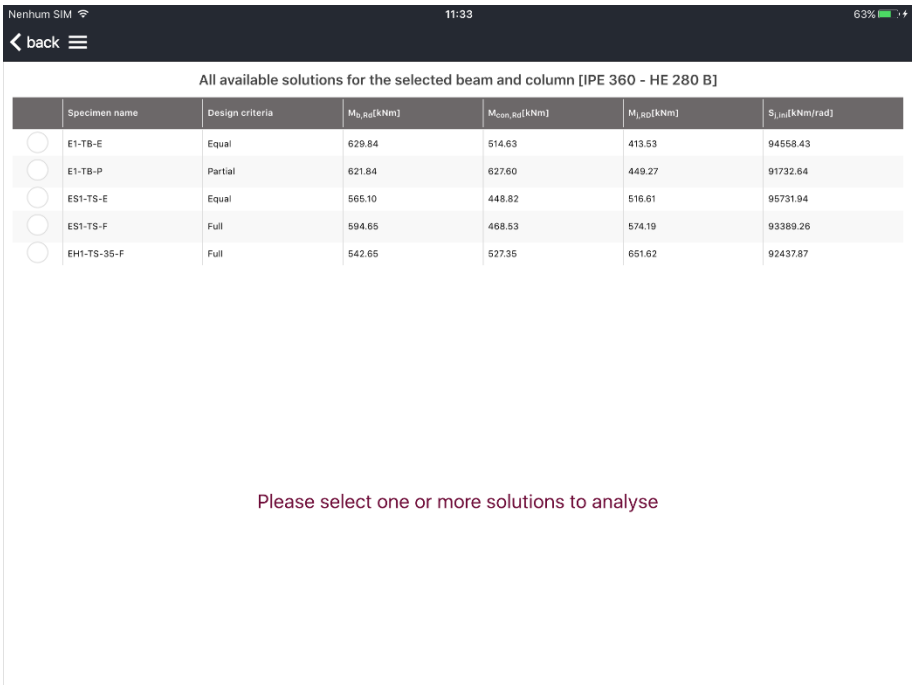

	Specimen name	Design criteria	$M_{b,Rd}$[kNm]	$M_{con,Rd}$[kNm]	$M_{j,RD}$[kNm]	$S_{j,ini}$[kNm/rad]
	E1-TB-E	Equal	629.84	514.63	413.53	94558.43
	E1-TB-P	Partial	621.84	627.60	449.27	91732.64
	ES1-TS-E	Equal	565.10	448.82	516.61	95731.94
	ES1-TS-F	Full	594.65	468.53	574.19	93389.26
	EH1-TS-35-F	Full	542.65	527.35	651.62	92437.87

Comparison of results

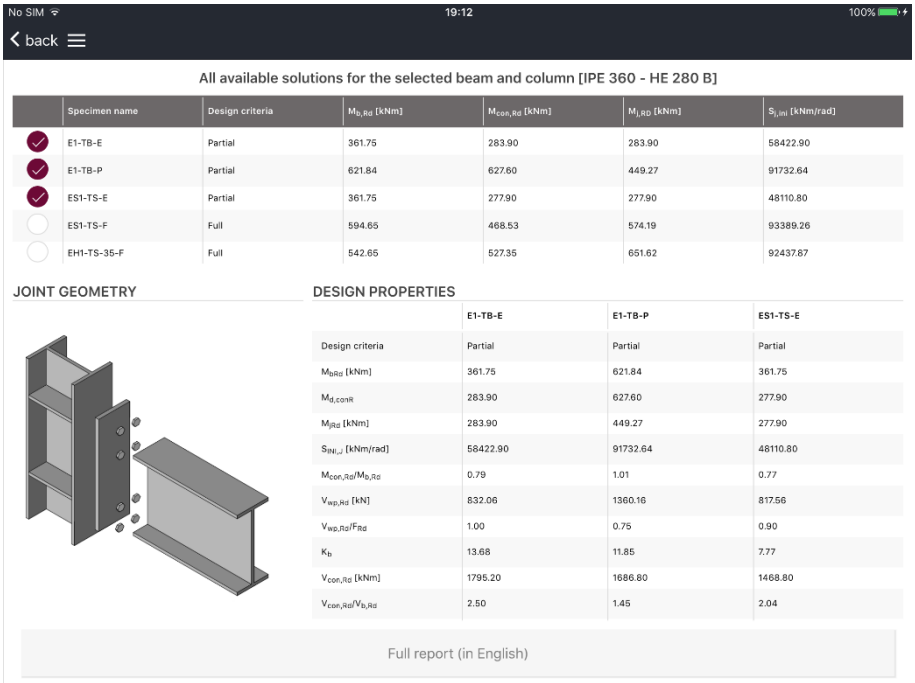

	Specimen name	Design criteria	$M_{b,Rd}$ [kNm]	$M_{con,Rd}$ [kNm]	$M_{j,RD}$ [kNm]	$S_{j,ini}$ [kNm/rad]
✓	E1-TB-E	Partial	361.75	283.90	283.90	58422.90
✓	E1-TB-P	Partial	621.84	627.60	449.27	91732.64
✓	ES1-TS-E	Partial	361.75	277.90	277.90	48110.80
	ES1-TS-F	Full	594.65	468.53	574.19	93389.26
	EH1-TS-35-F	Full	542.65	527.35	651.62	92437.87

	E1-TB-E	E1-TB-P	ES1-TS-E
Design criteria	Partial	Partial	Partial
M_{bRd} [kNm]	361.75	621.84	361.75
$M_{d,conR}$	283.90	627.60	277.90
M_{jRd} [kNm]	283.90	449.27	277.90
S_{jini} [kNm/rad]	58422.90	91732.64	48110.80
$M_{con,Rd}/M_{b,Rd}$	0.79	1.01	0.77
$V_{wp,Rd}$ [kN]	832.06	1360.16	817.56
$V_{wp,Rd}/F_{Rd}$	1.00	0.75	0.90
K_b	13.68	11.85	7.77
$V_{con,Rd}$ [kNm]	1795.20	1686.80	1468.80
$V_{con,Rd}/V_{b,Rd}$	2.50	1.45	2.04

Select report

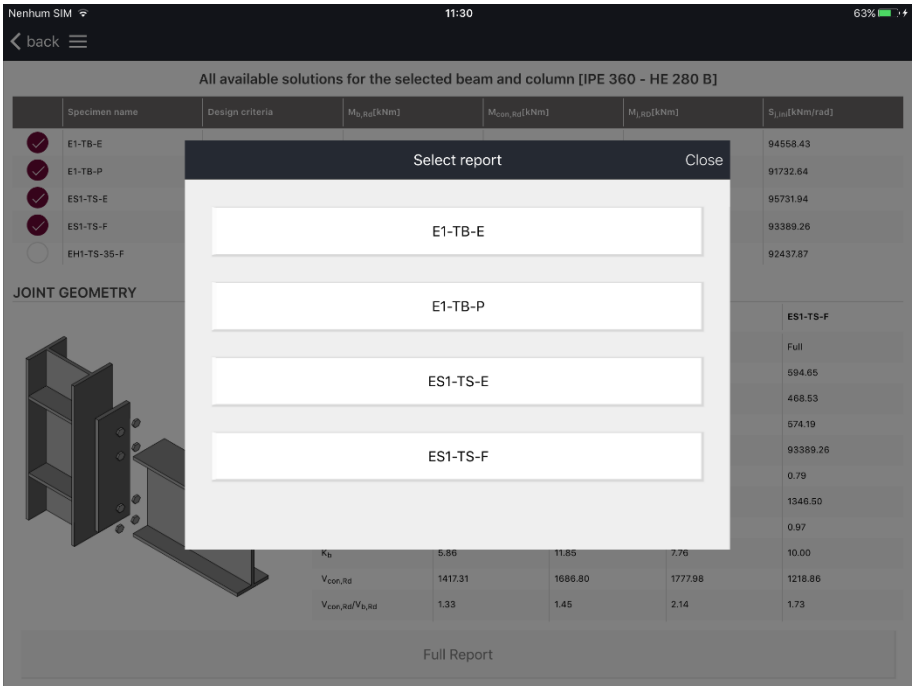

Full report

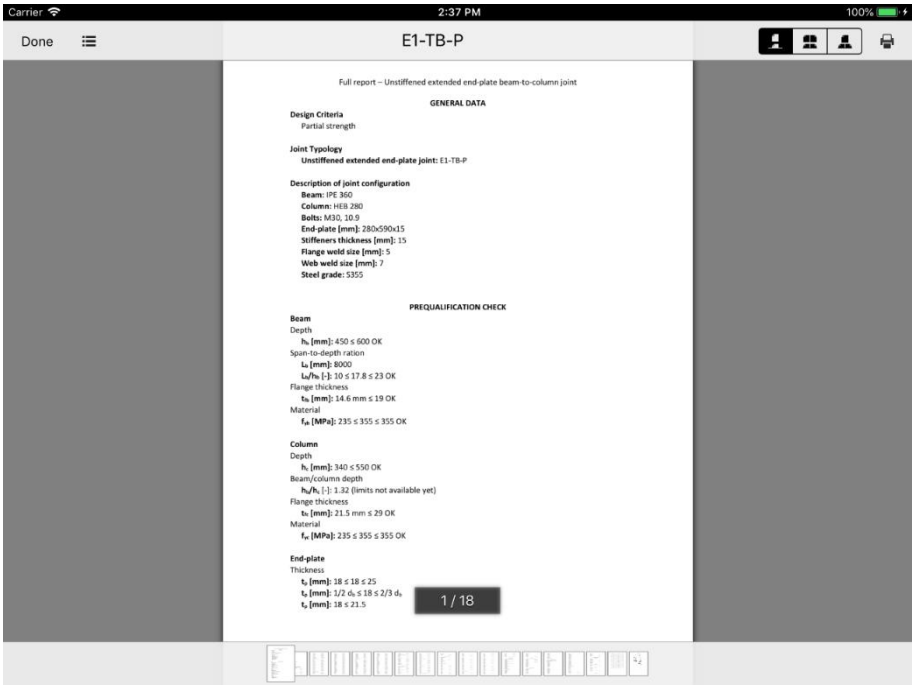

Full report – Unstiffened extended end-plate beam-to-column joint

GENERAL DATA

Design Criteria
Partial strength

Joint Typology
Unstiffened extended end-plate joint: E1-TB-P

Description of joint configuration
Beam: IPE 360
Column: HEB 280
Bolts: M30, 10.9
End-plate [mm]: 280x590x15
Stiffeners thickness [mm]: 15
Flange weld size [mm]: 5
Web weld size [mm]: 7
Steel grade: S355

PREQUALIFICATION CHECK

Beam
Depth
h_b **[mm]:** 450 ≤ 600 OK
Span-to-depth ration
L_b **[mm]:** 8000
L_b/h_b **[-]:** 10 ≤ 17.8 ≤ 23 OK
Flange thickness
t_{bf} **[mm]:** 14.6 mm ≤ 19 OK
Material
f_{yb} **[MPa]:** 235 ≤ 355 ≤ 355 OK

Column
Depth
h_c **[mm]:** 340 ≤ 550 OK
Beam/column depth
h_b/h_c [-]: 1.32 (limits not available yet)
Flange thickness
t_{cf} **[mm]:** 21.5 mm ≤ 29 OK
Material
f_{yc} **[MPa]:** 235 ≤ 355 ≤ 355 OK

End-plate
Thickness
t_p **[mm]:** 18 ≤ 18 ≤ 25
t_p **[mm]:** 1/2 d_b ≤ 18 ≤ 2/3 d_b
t_p **[mm]:** 18 ≤ 21.5

4. TECHNICAL BACKGROUND

4.1 Unstiffened end-plate beam-to-column joints

4.1.1 Description of the joint

Description of unstiffened extended end-plate joints

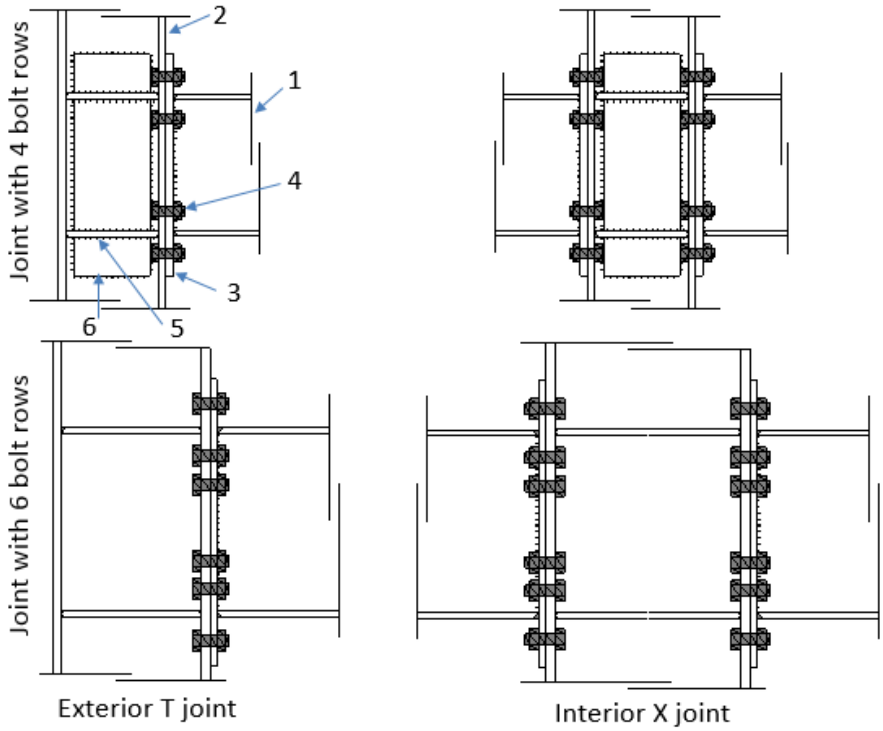

1: beam	3: end-plate	5: continuity plates
2: column	4: bolts	6: additional plates

Details of the groove full penetration welds

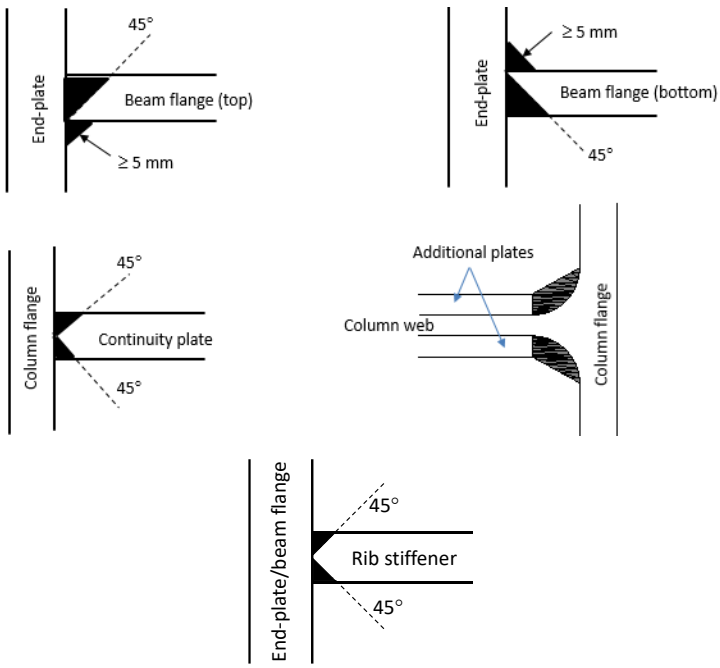

4.1.2 List of limit values for prequalified data

Table 4.1 - Limit values for prequalified data

Elements	Parameters	Application range
Beam		
	Depth	Maximum = 600mm
	Span-to-depth ration	Maximum = 23, Minimum = 10
	Flange thickness	Maximum = 19mm
	Material	From S235 to S355
Column		
	Depth	Maximum = 550mm
	Flange thickness	Maximum = 31mm
	Material	From S235 to S355
Beam/column depth		
End-plate		
	Thickness	18-25mm
	Material	From S235 to S355
Continuity plates		
	Thickness	Equal or larger than the thickness of the connected beam flange
	Material	From S235 to S355
Additional plates		
	Thickness	Table 4.2
	Material	From S235 to S355
Bolts		HV or HR
	Size	Table 4.2
	Grade	10.9
	Number of bolt rows	Table 4.2
	Washer	
	Holes	
Welds		
	End-plate to beam flanges	Reinforced groove full penetration
	Continuity plates to column flanges	Groove full penetration
	Additional plates to column flanges	Groove full penetration
	Other welds	Fillet welds: throat thickness is greater than 0.55 times the thickness of the connected plates.

4.1.3 Design procedure

The three main design steps of the component method are successively address:

- Component characterisation
- Assembly procedure
- Joint classification and design check

Global procedure

Step 1: Initial choice of the joint geometries and materials

- Bolt grade, bolt size and number of bolt rows
- Thickness and dimension of the end-plate
- Thickness and dimensions of the continuity plates
- Thickness and dimensions of the additional plates (if the case)

- The weld specification

Step 2: Component characterisation

- Component resistances (joint under bending)
- Component rigidities (joint under bending)
- Component resistances (joint under shear)

Step 3: Assembly procedures

- Connection resistance in bending
- Joint rigidity in bending
- Connection resistance in shear
- Ductility degree of the connection

Step 4: Joint classification and design check

- Resistance in bending
- Rigidity in bending
- Resistance in shear
- Ductility
- Check

4.1.4 Initial choice of the joint geometries and materials

Table 4.2 - Initial choice of joint geometries and materials

Connection elements	Beam sizes		
	Small (≈IPE360)	Middle (≈IPE450)	High (≈ IPE600)
Bolt grade	10.9		
Bolt size	M27	M30	M36
Number of bolt rows	4	4	6
End-plate	*Thickness*: $t_{ep}=(1/2\div2/3)d_b$ for partial joints; $t_{ep}=(2/3\div5/6)d_b$ for equal joints; but should be less than the thickness of the column flanges. *Dimensions*: The width should be equal to the column flange one. The extended part should be enough to position one bolt row, respecting the rules given in EC3-1-8 (§3.5).		
Additional plates	With HEB columns and IPE beams, the additional plates are only to be considered when the strong web panel is required. The thickness and the dimensions of the additional plates should be respected, so by following the rules given in EC3-1.8 (§ 6.2.6.1).		
Continuity plates	Table 4.1		
Weld details			
Note: t_{ep} is the thickness of the end-plate and d_b is the nominal diameter of the bolt.			

4.1.5 Assembly procedure and resistance checks

Classification type	Criterion	References
Resistance in bending	$M_{con,Rd} < M_{con,Ed}$: partial connection $M_{con,Rd} \approx M_{con,Ed}$: equal connection $M_{con,Rd} > M_{con,Ed}$: full strength connection $V_{wp,Rd} < \min[F_{con,Rd}, F_{fbc,Rd}]$: weak web panel $V_{wp,Rd} \approx \min[F_{con,Rd}, F_{fbc,Rd}]$: balance web panel $V_{wp,Rd,} > \min[F_{con,Rd}, F_{fbc,Rd}]$: strong web panel with: $F_{con,Rd} = \sum F_{Rd,ri}$ (I = 1 to 5 for joints with 6 bolt rows and i= 1 to 3 for joints with 4 bolt rows), is the transversal shear force in the connection due to the bolt rows in tension. $F_{fbc,Rd}$ is the resistance of the beam flanges and web in compression.	Equaljoints
Rigidity classification	*Classification* — *braced frames* — *Unbraced frames* Semi-rigid joints — $0.5 \le k_b < 8$ — $0.5 \le k_b < 25$ Rigid joints — $k_b \ge 8$ — $k_b \ge 25$ $k_b = S_j / (EI_b / L_b)$	EC3-1-8 5.2.2
Resistance in shear	$V_{con,Rd} < V_{b,Rd}$: partial resistance in shear $V_{con,Rd} \approx V_{b,Rd}$: equal resistance in shear $V_{con,Rd} > V_{b,Rd}$: full resistance in shear	
Ductility classification	$\beta_{\max} \le 1.0$: ductility degree 1 $\beta_{\max} > 1.0$ *and* $\eta_{\max} \le 0.95$: ductility degree 2 With: $\beta_{\max} > \max[\beta_{r1}, \beta_{r2}]$; $\eta_{\max} > \max[\eta_{r1}, \eta_{r2}]$	Equaljoints

4.1.6 Component characterization (joint under bending)

Component	Detailed rules	References
Column web panel in shear	$V_{wp,Rd} = \dfrac{0.9 A_{vc} f_{y,wc}}{\sqrt{3}\gamma_{M0}} + \dfrac{4\,(0.25 t_{fc}^2 f_{y,fc})\,(b_c - t_{wc} - 2r_c)}{d_s}$ 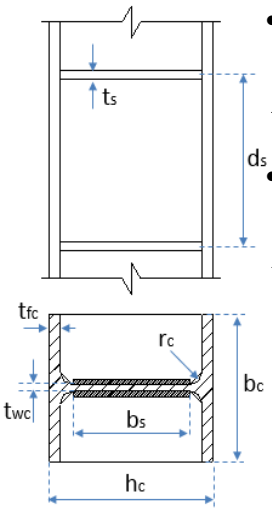 • Column web panel in shear with transverse web stiffeners and no additional plate: $A_{vc} = A_c - 2b_c t_{fc} + (t_{wc} + 2r_c) t_{fc}$ • Column web panel in shear with transverse web stiffeners and additional plate: $A_{vc} = A_c - 2b_c t_{fc} + (t_{wc} + 2r_c) t_{fc} + t_{wc} b_s$	EC3-1-8 6.2.6.1

Beam cross-section in bending	$M_{b,Rd} = W_{b,p} f_{y,b}$ • $W_{b,p}$ is the plastic modulus in bending of the beam section. • $f_{y,b}$ is the yield strength of the beam material.	
Column flange in bending	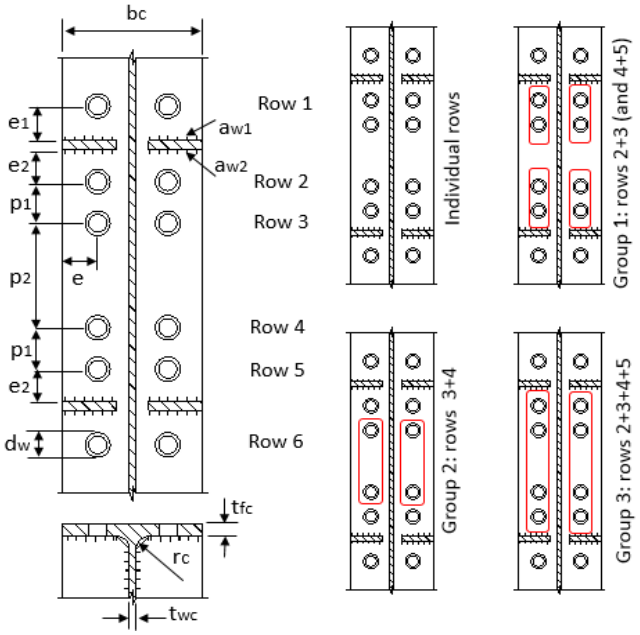 Cases of 6 bolt rows 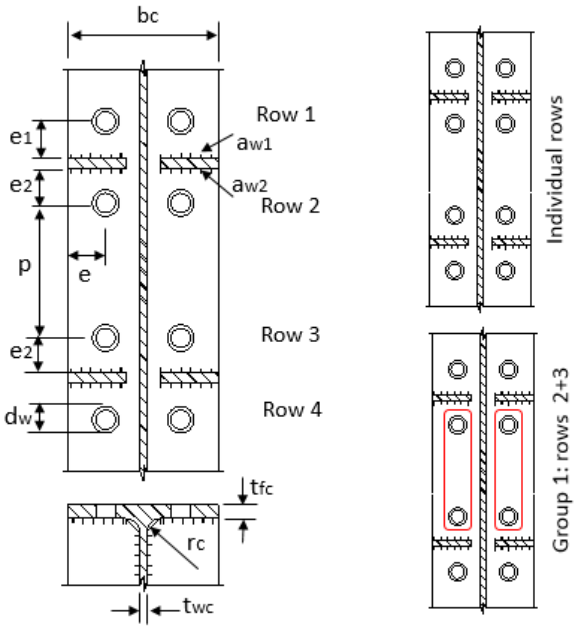 Cases of 4 bolt rows For each bolt row or for a group of bolt rows, the resistance is obtained using the following formula: $F_{cfb,Rd} = \min[F_{T,1,Rd}; F_{T,2,Rd}]$ with • $F_{T,1,Rd} = \dfrac{(8n - 2e_w) M_{pl,1,Rd}}{2mn - e_w (m+n)}$	EC3-1-8 6.2.6.4

- $F_{T,2,Rd} = \dfrac{2M_{pl,2,Rd} + n\Sigma F_{t,Rd}}{m+n}$

In which:

$M_{pl,1,Rd} = 0,25\Sigma\ell_{eff,1}\, t_{fc}^{\,2}\, f_{y,fc} / \gamma_{M0}$

$M_{pl,2Rd} = 0,25\Sigma\ell_{eff,2}\, t_{fc}^{\,2}\, f_{y,fc} / \gamma_{M0}$

$m = 0.5(b_c - 2e - t_{wc} - 1.6r_c)$

$n = \min[e, 1.25m]$, with circular patterns n=∞ can be used.

$e_w = 0.25d_w$ (with d_w is the diameter of the washer)

Effective lengths

- Connection with 6 bolt rows

<u>*Bolt row 1*</u>:

$l_{eff,1} = \min[2\pi m, \quad \alpha m]$

$l_{eff,2} = \alpha m$

<u>*Bolt row 2 (or row 5)*</u>:

Individual row:

$l_{eff,1} = \min[2\pi m, \alpha m]$

$l_{eff,2} = \alpha m$

First row of the group 1 or group 3

$l_{eff,1} = \min[\pi m + p_1, \quad 0.5p_1 + \alpha m - (2m + 0.625e)]$

$l_{eff,2} = 0.5p_1 + \alpha m - (2m + 0.625e)$

<u>*Bolt row 3 (or row 4)*</u>:

Individual:

$l_{eff,1} = \min[2\pi m, \quad 4m + 1,25e]$

$l_{eff,2} = 4m + 1,25e$

Last row of the group 1:

$l_{eff,1} = \min[\pi m + p_1, \quad 2m + 0.625e + 0.5p_1]$

$l_{eff,2} = 2m + 0.625e + 0.5p_1$

One row of the group 2:

$l_{eff,1} = \min[\pi m + p_2, \quad 0.5p_2 + 0.5\alpha m]$

$l_{eff,2} = 0.5p_2 + 0.5\alpha m$

Intermediate row of a group 3:

$l_{eff,1} = p_1 + p_2$

$l_{eff,2} = 0.5(p_1 + p_2)$

α is given by figure 6.11 in EC3-1-8, depending on:

	$\lambda_1 = \dfrac{m}{m+e}$; $\lambda_2 = \dfrac{m_2}{m+e}$ where: $m_2 = e_1 - 0.8a_{w1}\sqrt{2}$ for bolt row 1 $m_2 = e_2 - 0.8a_{w2}\sqrt{2}$ for bolt row 2 or 5 ❖ Connection with 4 bolt rows *Bolt row 1*: $l_{eff,1} = \min[2\pi m, \quad \alpha m]$ $l_{eff,2} = \alpha m$ *Bolt row 2*: *Individual*: $l_{eff,1} = \min[2\pi m, \quad \alpha m]$ $l_{eff,2} = \alpha m$ *One row of the group 2+3* $l_{eff,1} = \min[\pi m + p, \quad 0.5p + 0.5\alpha m]$ $l_{eff,2} = 0.5p + 0.5\alpha m$ *Bolt row 3: the similar with the bolt row 2* α is given by the figure 6.11 in EN-1993-1-8, depending on: $\lambda_1 = \dfrac{m}{m+e}$; $\lambda_2 = \dfrac{m_2}{m+e}$ where: $m_2 = e_1 - 0.8a_{w1}\sqrt{2}$ for bolt row 1 $m_2 = e_2 - 0.8a_{w2}\sqrt{2}$ for bolt row 2 or 3	
End-plate in bending	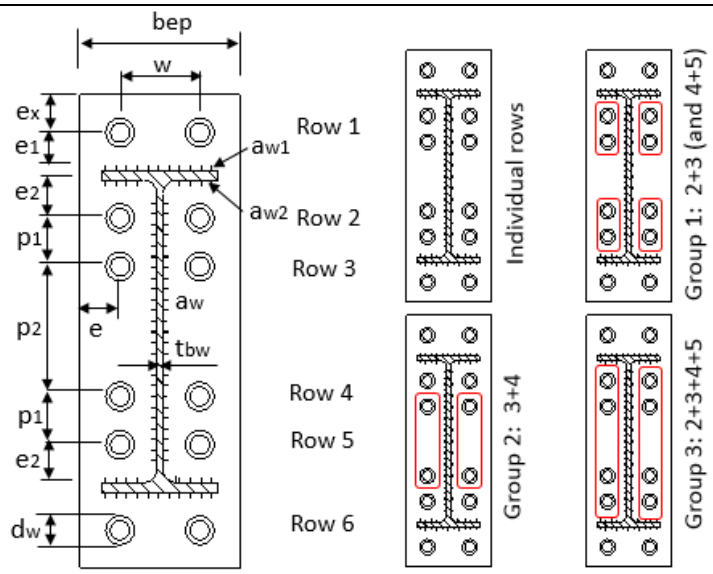	EC3-1-8 6.2.6.5

Cases of 6 bolt rows

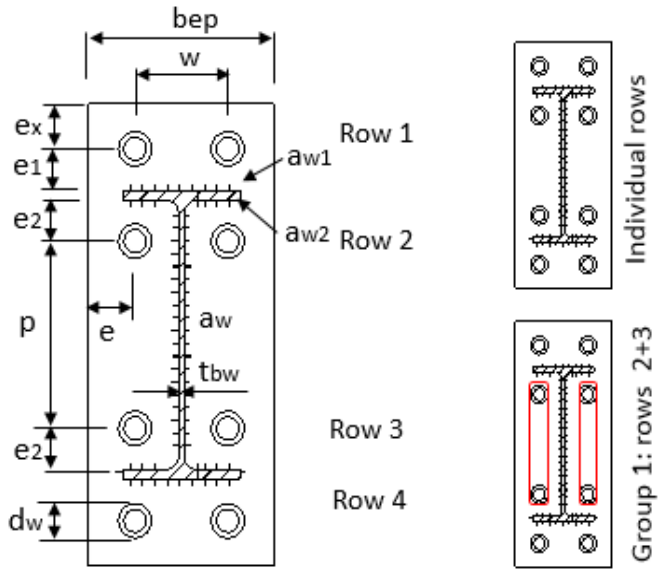

Cases of 4 bolt rows

For each bolt row or for a group of bolt rows, the resistance is obtained using the following formula:

$F_{pb,Rd} = \min[F_{T,1,Rd}; F_{T,2,Rd}]$ with

- $F_{T,1,Rd} = \dfrac{(8n - 2e_w) M_{pl,1,Rd}}{2mn - e_w (m+n)}$
- $F_{T,2,Rd} = \dfrac{2M_{pl,2,Rd} + n\Sigma F_{t,Rd}}{m+n}$

In which: $M_{pl,1,Rd} = 0,25\Sigma \ell_{eff,1} t_{ep}^{\ 2} f_{y,ep} / \gamma_{M0}$

$M_{pl,2Rd} = 0,25\Sigma \ell_{eff,2} t_{ep}^{\ 2} f_{y,ep} / \gamma_{M0}$

$\begin{cases} m = 0.5(b_{ep} - 2e - t_{bw} - 1.6a_w\sqrt{2}) \\ n = \min[e, 1.25m] \end{cases}$ for bolt rows inside the beam flanges

$\begin{cases} m = e_1 - 0.8a_{w1}\sqrt{2} \\ n = \min[e_x, 1.25m] \end{cases}$ for bolt rows outside the beam flanges

(with circular patterns, n=∞ can be used).

$e_w = 0.25d_w$

Effective lengths

❖ *Connection with 6 bolt rows*

<u>*Bolt row 1*</u>:

$$l_{eff,1} = \min \begin{cases} 2\pi m, \ \pi m + w, \ \pi m + 2e \\ 4m + 1.25e_x, \ e + 2m + 0.625e_x, \ 0.5b_{ep}, \ 0.5w + 2m + 0.625e_x \end{cases}$$

$$l_{eff,2} = \min[4m + 1.25e_x, \ e + 2m + 0.625e_x, \ 0.5b_{ep}, \ 0.5w + 2m + 0.625e_x]$$

<u>*Bolt row 2 (or row 5)*</u>:

Individual row:

$$l_{eff,1} = \min[2\pi m, \alpha m]$$

$$l_{eff,2} = \alpha m$$

First row of the group 1(rows 2+3 or 4+5)

$$l_{eff,1} = \min[\pi m + p_1, \quad 0.5p_1 + \alpha m - (2m + 0.625e)]$$

$$l_{eff,2} = 0.5p_1 + \alpha m - (2m + 0.625e)$$

Bolt row 3 (or row 4):

Individual row:

$$l_{eff,1} = \min[2\pi m, \quad 4m + 1,25e]$$

$$l_{eff,2} = 4m + 1,25e$$

Last row of the group 1 (rows 2+3 or 4+5):

$$l_{eff,1} = \min[\pi m + p_1, \quad 2m + 0.625e + 0.5p_1]$$

$$l_{eff,2} = 2m + 0.625e + 0.5p_1$$

First row (or last row) of the group 2 (rows 3+4):

$$l_{eff,1} = \min[\pi m + p_2, \quad 2m + 0.625e + 0.5p_2]$$

$$l_{eff,2} = 2m + 0.625e + 0.5p_2$$

Intermediate row of a group 3 (rows 2+3+4+5):

$$l_{eff,1} = p_1 + p_2$$

$$l_{eff,2} = 0.5(p_1 + p_2)$$

α is given by the figure 6.11 in EN-1993-1-8, depending on:

$$\lambda_1 = \frac{m}{m+e}; \ \lambda_2 = \frac{m_2}{m+e}$$

where:

$m_2 = e_1 - 0.8a_{w1}\sqrt{2}$ for bolt row 1

$m_2 = e_2 - 0.8a_{w2}\sqrt{2}$ for bolt row 2 or 5

- *Connection with 4 bolt rows*

Bolt row 1:

$$l_{eff,1} = \min \begin{cases} 2\pi m, \ \pi m + w, \ \pi m + 2e \\ 4m + 1.25e_x, \ e + 2m + 0.625e_x, \ 0.5b_{ep}, \ 0.5w + 2m + 0.625e_x \end{cases}$$

$$l_{eff,2} = \min[4m + 1.25e_x, \ e + 2m + 0.625e_x, \ 0.5b_{ep}, \ 0.5w + 2m + 0.625e_x]$$

Bolt row 2:

Individual row:

$$l_{eff,1} = \min[2\pi m, \quad \alpha m]$$

	$l_{eff,2} = \alpha m$ *One row of the group 2+3* $l_{eff,1} = \min[\pi m + p, \quad 0.5p + 0.5\alpha m]$ $l_{eff,2} = 0.5p + 0.5\alpha m$ *<u>Bolt row 3: similar to the bolt row 2:</u>* α is given by the figure 6.11 in EC3-1-8, depending on: $\lambda_1 = \frac{m}{m+e}$; $\lambda_2 = \frac{m_2}{m+e}$ $m_2 = e_1 - 0.8a_{w1}\sqrt{2}$ for bolt row 1 $m_2 = e_2 - 0.8a_{w2}\sqrt{2}$ for bolt row 2 or 3	
Beam flanges and web in compression	$F_{fbc,Rd} = M_{c,Rd} / (h - t_{fb})$ where: • h is the depth of the connected beam; • $M_{c,Rd}$ is the design moment resistance of the beam cross-section, reduced if necessary to allow for shear, see EN 1993-1-1. • t_{fb} is the flange thickness of the connected beam.	EC3-1-8 6.2.6.7
Column web and continuity plates in compression	The resistance of the column web and continuity plates may be computed by: $F_{wcc,Rd} = \frac{\omega k_{wc} b_{eff,cf} t_{wc} f_{y,wc}}{\gamma_{M0}} + \frac{A_{cp} f_{y,cp}}{\gamma_{M0}}$ where: $b_{eff,c,cf} = t_{fb} + \sqrt{2}(a_{w1} + a_{w2}) + 5(t_{fc} + r_c) + 2t_{ep}$ A_{cp} is the area of the continuity plates (both two sides); The reduction factor k_{wc} taking into account the axial stress in the column web, given in 6.2.6.2(2) of EC3-1-8; The reduction factor ω is given by Table 6.3 in EC3-1-8; *<u>Note</u>*: the reduction due to buckling of the column web and the continuity plates under transverse compression are neglected. The geometries (the slender) of the continuity plates to satisfy this condition will be shown in Table 4.3.1.	EC3-1-8 6.2.6.2
Beam web in tension	$F_{wbt,Rd} = b_{eff,wb} t_{wb} f_{y,wb} / \gamma_{M0}$ The effective width $b_{eff,t,wb}$ of the beam web in tension should be taken as equal to the effective length of the equivalent T-stub representing the end-plate in bending for an individual bolt-row or a bolt-group.	EC3-1-8 6.2.6.8

Column web in tension	$F_{wct,Rd} = \frac{\omega b_{eff,wc} t_{wc} f_{y,wc}}{\gamma_{M0}}$ The effective width $b_{eff,t,wc}$ of the column flange in tension should be taken as equal to the effective length of the equivalent T-stub representing the column flange in bending for an individual bolt-row or a bolt-group. The reduction factor ω is given by Table 6.3 in EC3-1-8.	EC3-1-8 6.2.6.3
Bolts in tension	The resistance of a bolt row (two bolts) in tension is given by: $F_{bt,Rd} = 2 \frac{0,9 f_{ub} A_s}{\gamma_{M2}}$ where: • f_{ub} is the ultimate tensile strength of the bolt; • A_s is the tensile stress area of the bolt.	EC3-1-8 3.6.1

4.1.7 Component rigidities (joint under bending)

Component	Detailed rules	References
Column web panel in shear	$k_1 = \frac{0.38 A_{vc}}{\beta z}$ The transformation parameter β is given in Table 5.4 of EC3-1-8. The lever arm, z, of the connection is given in EC-1-8, 6.3.3.1.	EC3-1-8 6.3.2
Column flange in bending	For simple bolt row in tension: $k_4 = \frac{0.9 b_{eff,cf} t_{fc}^3}{m^3}$ The effective width b_{eff} is the smallest effective lengths of the bolt row (individual or as part of a group bolt rows).	EC3-1-8 6.3.2
End-plate in bending	For simple bolt row in tension: $k_5 = \frac{0.9 b_{eff,ep} t_{ep}^3}{m^3}$ The effective width b_{eff} is the smallest effective lengths of the bolt row (individual or as part of a group bolt rows).	EC3-1-8 6.3.2
Column web in tension	For simple bolt row in tension: $k_3 = \frac{0.7 b_{eff,wc} t_{wc}}{d_c}$ The effective width b_{eff} is the smallest effective lengths of the bolt row (individual or as part of a group bolt rows) of the column flange in bending component.	EC3-1-8 6.3.2
Bolts in tension	For simple bolt row in tension: $k_{10} = 1.6 A_s / L_b$	EC3-1-8 6.3.2

4.1.8 Component resistance (joint under shear)

Component	Detailed rules	References
Beam web in shear	$V_{b,RD} = \chi_w A_{vb} f_{y,b} / \sqrt{3}\gamma_{M1}$ where: $A_{vb} = A_b - 2b_b t_{fb} + (t_{wb} + 2r_b)t_{fb}$ $\chi_w = 0.83/\bar{\lambda}_w$ if $\bar{\lambda}_w \geq 0.83$; $\chi_w = 1.0$ if $\bar{\lambda}_w < 0.83$ with $\bar{\lambda}_w = 0.3467(h_{wb}/t_{wb})\sqrt{f_{y,b}/E}$	EC3-1-5 5.3
Column flange in bearing	For simple bolt row (two bolts) in shear: $F_{b,Rd} = 2\frac{k_1 \alpha_b f_u d t_{fc}}{\gamma_{M2}}$ where: $k_1 = \min[2.8\frac{e}{d_0} - 1.7, \quad 2.5]$ α_b depending on the sear load direction and bolt row position: *Shear load going down* Bolt rows 1, 5 and 6 (or (*) rows 1, 3 and 4): $\alpha_b = 1.0$ Bolt rows 2 and 4 (or(*): row 2): $\alpha_b = \min[1.0, \quad p_1/3d_0 - 0.25]$ Bolt row 3: $\alpha_b = \min[1.0, \quad p_2/3d_0 - 0.25]$ *Shear load going up* Bolt rows 1, 2 and 6 (or(*) rows 1, 2 and 4) $\alpha_b = 1.0$ Bolt rows 3 and 5 (or(*) row 3) $\alpha_b = \min[1.0, \quad p_1/3d_0 - 0.25]$ Bolt row 4: $\alpha_b = \min[1.0, \quad p_2/3d_0 - 0.25]$ (*): used for joint with 4 bolt rows (p_1 should be replaced by p)	EC3-1-8 3.6.1
End-plate in bearing	For simple bolt row (two bolts) in shear: $F_{b,Rd} = 2\frac{k_1 \alpha_b f_u d t_{fc}}{\gamma_{M2}}$ $k_1 = \min[2.8\frac{e}{d_0} - 1.7, \quad 2.5]$ *Shear load going down*: Bolt rows 2 and 6 (or(*) rows 2 and 4): $\alpha_b = 1.0$ Bolt row 1 (or(*) row 1): *Shear load going up*: Bolt rows 1 and 5 (or(*) rows 1 and 3): $\alpha_b = 1.0$ Bolt row 6 (or(*) row 4):	EC3-1-8 3.6.1

	$\alpha_b = \min[1.0, \quad e_x / 3d_0]$ Bolt rows 3 and 5 (or(*) row 3): $\alpha_b = \min[1.0, \quad p_1 / 3d_0 - 0.25]$ Bolt row 4: $\alpha_b = \min[1.0, \quad p_2 / 3d_0 - 0.25]$	$\alpha_b = \min[1.0, \quad e_x / 3d_0]$ Bolt rows 2 and 4 (or(*): row 2) $\alpha_b = \min[1.0, \quad p_1 / 3d_0 - 0.25]$ Bolt row 3: $\alpha_b = \min[1.0, \quad p_2 / 3d_0 - 0.25]$	
	(*): used for joint with 4 bolt rows (p_1 should be replaced by p)		
Bolts in shear	For simple bolt row (two bolts) in shear: $F_{b,Rd} = 2\frac{\alpha_v f_{ub} A_s}{\gamma_{M2}}$ α_v=0.6 for 8.8 bolts and α_v=0.5 for 10.9 bolts.		EC3-1-8 3.6.1

4.2 Stiffened end-plate beam-to-column joints

4.2.1 Description of the joint

Description of stiffened extended end-plate joints

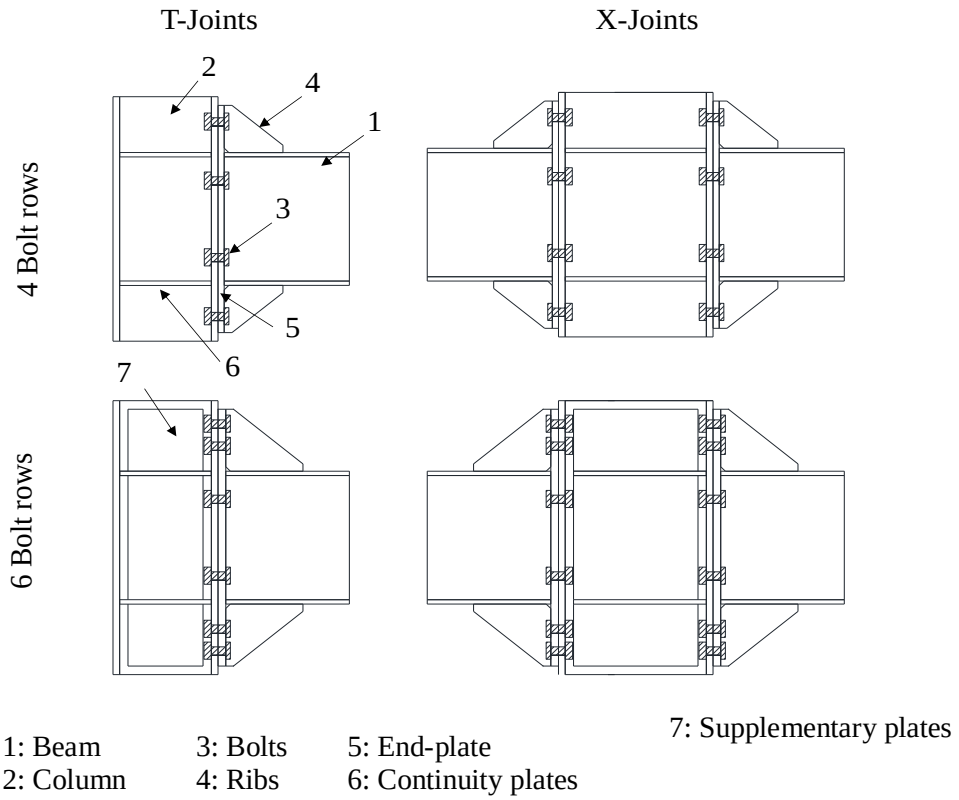

Details of the groove full penetration welds

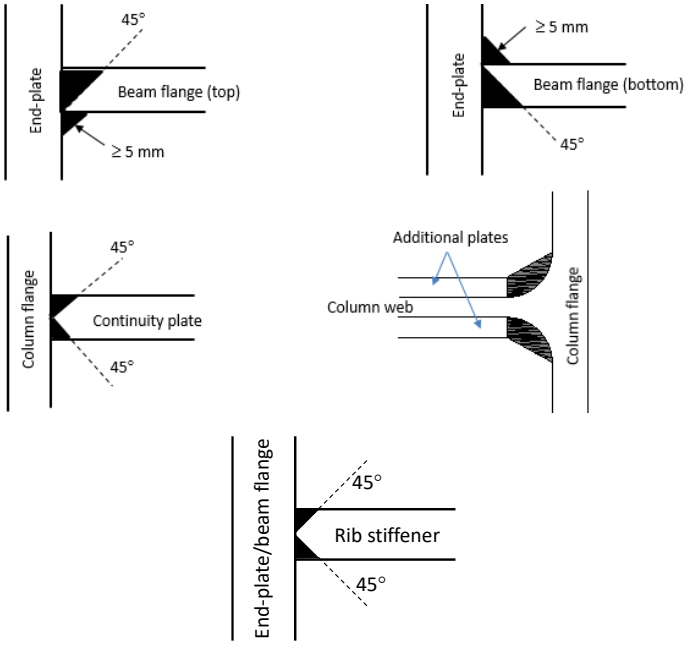

4.2.2 List of limit values for prequalified data

Table 4.3 - Limit values for prequalified data

Elements	**Application range**
Beam	
Depth	Maximum=600mm
Span-to-depth ratio	Maximum=23, Minimum=10
Flange thickness	Maximum=19mm
Material	From S235 to S355
Column	
Depth	Maximum=550mm
Flange thickness	Maximum=29mm
Material	From S235 to S355
Beam/column depth	0.65-2.15
End-plate	18-30mm
Thickness	Table 4.4
Material	From S235 to S355
Continuity plates	
Thickness	Equal or larger than the thickness of the connected beam flange
Material	From S235 to S355
Additional plates	
Thickness	Table 4.4
Material	From S235 to S355
Bolts	HV or HR
Size	Table 4.4
Grade	10.9
Number of bolt rows	Table 4.4
Washer	According to EN 14399-4
Holes	According to EN1993:1-8
Welds	

End-plate to beam flanges	Reinforced groove full penetration
Continuity plates to column flanges	Groove full penetration
Additional plates to column flanges	Groove full penetration
Other welds	Fillet welds: throat thickness greater than 0.55 time of the thickness the connected plates.

4.2.3 Design procedure

The three main design steps of the component method are successively address:

- Component characterization
- Assembly procedure
- Joint classification and design check

Global procedure

Step 1: Initial choice of the connection geometries and materials

- Bolt grade, bolt size and number of bolt rows
- Thickness and dimension of the end-plate
- Thickness and dimensions of the continuity plates
- Thickness and dimensions of the additional plates (if the case)
- The weld specification

Step 2: Component characterisation

- Component resistances (joint under bending)
- Component rigidities (joint under bending)
- Component resistances (joint under shear)

Step 3: Assembly procedures

- Joint resistance in bending
- Joint rigidity in bending
- Connection resistance in shear
- Ductility degree of the connection

Step 4: Joint classification and design check

- Resistance in bending
- Rigidity in bending
- Resistance in shear
- Ductility
- Check

4.2.4 Initial choice of the joint geometries and materials

Table 4.4 - Initial choice of joint geometries and materials

Connection elements	Beam sizes		
	Small (≈IPE360)	Middle (≈ IPE450)	High (≈ IPE600)
Bolt grade	10.9		
Bolt size	M27	M30	M36
Number of bolt rows	4/6	4/6	6
End-plate	*Thickness*: t_{ep}=(2/3÷5/6) d_b for full joints it can be slightly larger than the column flanges; t_{ep}=(2/3÷5/6)d_b for equal joints; but should be less than the thickness of the column flanges. *Dimensions*: The width should be equal to or smaller than the column flange one. The extended part should be enough to position one or two bolt rows, respecting the rules given in EC3-1-8 (§3.5).		
Additional plates	The thickness and the dimensions of the additional plates should be respected the rules given in EC3-1.8 (§ 6.2.6.1), otherwise plug welds should be used to guarantee the stability strength of the supplementary plates.		
Continuity plates	Table 4.3		
Weld details			
Note: t_{ep} is the thickness of the end-plate and d_b is the nominal diameter of the bolt.			

4.2.5 Assembly procedure and resistance checks

Classification type	Criterion	References
Resistance in bending	$M_{con,Rd} < M_{con,Ed}$: partial connection $M_{con,Rd} \approx M_{con,Ed}$: equal connection $M_{con,Rd} > M_{con,Ed}$: full strength connection $V_{wp,Rd} < \min[F_{con,Rd}, F_{fbc,Rd}]$: weak web panel $V_{wp,Rd} \approx \min[F_{con,Rd}, F_{fbc,Rd}]$: balance web panel $V_{wp,Rd,} > \min[F_{con,Rd}, F_{fbc,Rd}]$: strong web panel with: $F_{con,Rd} = \sum F_{Rd,ri}$ (I = 1 to 5 for joints with 6 bolt rows and i= 1 to 3 for joints with 4 bolt rows), is the transversal shear force in the connection due to the bolt rows in tension. $F_{fbc,Rd}$ is the resistance of the beam flanges and web in compression.	Equaljoints
Rigidity classification	*Classification* — *braced frames* — *Unbraced frames* Semi-rigid joints — $0.5 \le k_b < 8$ — $0.5 \le k_b < 25$ Rigid joints — $k_b \ge 8$ — $k_b \ge 25$ $k_b = S_j / (EI_b / L_b)$	EC3-1-8 5.2.2
Resistance in shear	$V_{con,Rd} < V_{b,Rd}$: partial resistance in shear	

	$V_{con,Rd} \approx V_{b,Rd}$: equal resistance in shear $V_{con,Rd} > V_{b,Rd}$: full resistance in shear	
Ductility classification	$\beta_{\max} \leq 1.0$: ductility degree 1 $\beta_{\max} > 1.0 \quad and \quad \eta_{\max} \leq 0.95$: ductility degree 2 With: $\beta_{\max} > \max[\beta_{r1}, \beta_{r2}]$; $\eta_{\max} > \max[\eta_{r1}, \eta_{r2}]$	Equaljoints

4.2.6 Component characterization (joint under bending)

Component	Detailed rules	References
Column web panel in shear	$V_{wp,Rd} = \dfrac{0.9 A_{vc} f_{y,\mathrm{wc}}}{\sqrt{3}\gamma_{M0}} + \dfrac{4\ (0.25 t_{fc}^2 f_{y,fc})\ (b_c - t_{wc} - 2r_c)}{d_s}$ 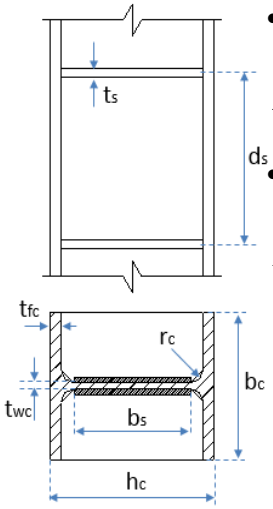 • Column web panel in shear with transverse web stiffeners and no additional plate: $A_{vc} = A_c - 2b_c t_{fc} + (t_{wc} + 2r_c) t_{fc}$ • Column web panel in shear with transverse web stiffeners and additional plate: $A_{vc} = A_c - 2b_c t_{fc} + (t_{wc} + 2r_c) t_{fc} + t_{wc} b_s$	EC3-1-8 6.2.6.1

Beam cross-section in bending	$M_{b,Rd} = W_{b,p} f_{y,b}$ • $W_{b,p}$ is the plastic modulus in bending of the beam section. • $f_{y,b}$ is the yield strength of the beam material.	
Column flange in bending	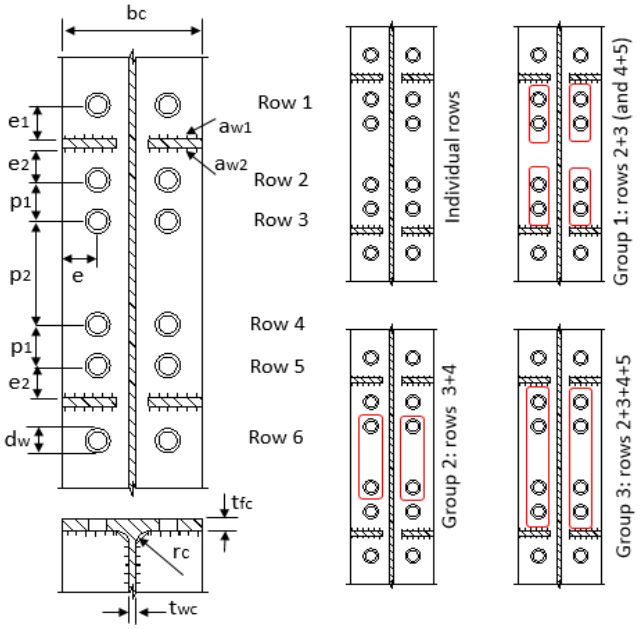 Cases of 6 bolt rows 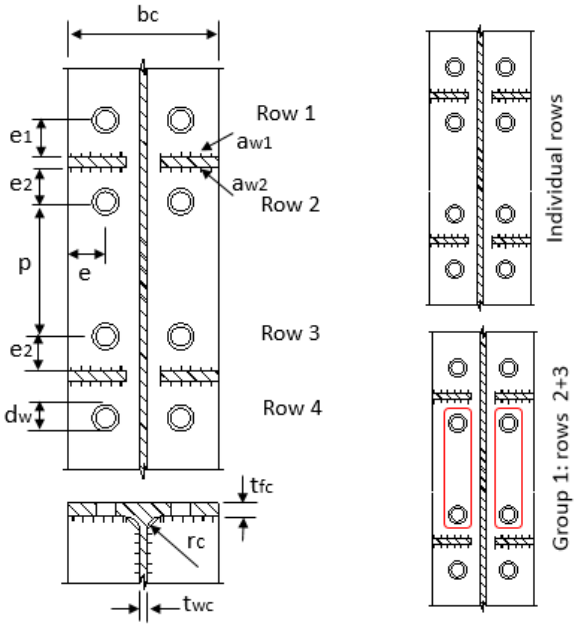 Cases of 4 bolt rows For each bolt row or for a group of bolt rows, the resistance is obtained using the following formula: $F_{cfb,Rd} = \min[F_{T,1,Rd}; F_{T,2,Rd}]$ with • $F_{T,1,Rd} = \frac{(8n - 2e_w) M_{pl,1,Rd}}{2mn - e_w (m+n)}$	EC3-1-8 6.2.6.4

- $F_{T,2,Rd} = \dfrac{2M_{pl,2,Rd} + n\Sigma F_{t,Rd}}{m+n}$

In which:

$M_{pl,1,Rd} = 0,25\Sigma\ell_{eff,1}\, t_{fc}^{\,2}\, f_{y,fc} / \gamma_{M0}$

$M_{pl,2Rd} = 0,25\Sigma\ell_{eff,2}\, t_{fc}^{\,2}\, f_{y,fc} / \gamma_{M0}$

$m = 0.5(b_c - 2e - t_{wc} - 1.6r_c)$

$n = \min[e, 1.25m]$, with circular patterns n=∞ can be used.

$e_w = 0.25d_w$ (with d_w is the diameter of the washer)

Effective lengths

- Connection with 6 bolt rows

<u>*Bolt row 1*</u>:

$l_{eff,1} = \min[2\pi m, \quad \alpha m]$

$l_{eff,2} = \alpha m$

<u>*Bolt row 2 (or row 5)*</u>:

Individual row:

$l_{eff,1} = \min[2\pi m, \alpha m]$

$l_{eff,2} = \alpha m$

First row of the group 1 or group 3

$l_{eff,1} = \min[\pi m + p_1, \quad 0.5p_1 + \alpha m - (2m + 0.625e)]$

$l_{eff,2} = 0.5p_1 + \alpha m - (2m + 0.625e)$

<u>*Bolt row 3 (or row 4)*</u>:

Individual:

$l_{eff,1} = \min[2\pi m, \quad 4m + 1,25e]$

$l_{eff,2} = 4m + 1,25e$

Last row of the group 1:

$l_{eff,1} = \min[\pi m + p_1, \quad 2m + 0.625e + 0.5p_1]$

$l_{eff,2} = 2m + 0.625e + 0.5p_1$

One row of the group 2:

$l_{eff,1} = \min[\pi m + p_2, \quad 0.5p_2 + 0.5\alpha m]$

$l_{eff,2} = 0.5p_2 + 0.5\alpha m$

Intermediate row of a group 3:

$l_{eff,1} = p_1 + p_2$

$l_{eff,2} = 0.5(p_1 + p_2)$

α is given by figure 6.11 in EC3-1-8, depending on:

	$\lambda_1 = \dfrac{m}{m+e}$; $\lambda_2 = \dfrac{m_2}{m+e}$ where: $m_2 = e_1 - 0.8a_{w1}\sqrt{2}$ for bolt row 1 $m_2 = e_2 - 0.8a_{w2}\sqrt{2}$ for bolt row 2 or 5 ❖ Connection with 4 bolt rows *<u>Bolt row 1</u>*: $l_{eff,1} = \min[2\pi m, \quad \alpha m]$ $l_{eff,2} = \alpha m$ *<u>Bolt row 2</u>*: *Individual*: $l_{eff,1} = \min[2\pi m, \quad \alpha m]$ $l_{eff,2} = \alpha m$ *One row of the group 2+3* $l_{eff,1} = \min[\pi m + p, \quad 0.5p + 0.5\alpha m]$ $l_{eff,2} = 0.5p + 0.5\alpha m$ *<u>Bolt row 3: the similar with the bolt row 2</u>* α is given by the figure 6.11 in EN-1993-1-8, depending on: $\lambda_1 = \dfrac{m}{m+e}$; $\lambda_2 = \dfrac{m_2}{m+e}$ where: $m_2 = e_1 - 0.8a_{w1}\sqrt{2}$ for bolt row 1 $m_2 = e_2 - 0.8a_{w2}\sqrt{2}$ for bolt row 2 or 3	
End-plate in bending	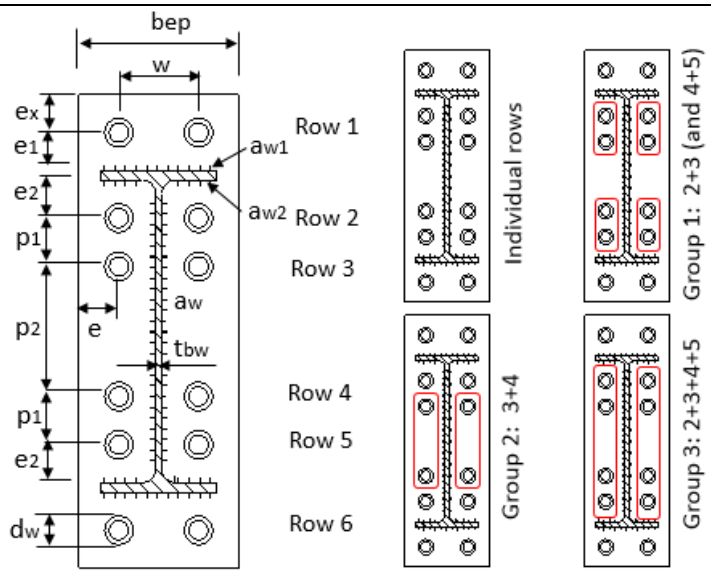 Cases of 6 bolt rows	EC3-1-8 6.2.6.5

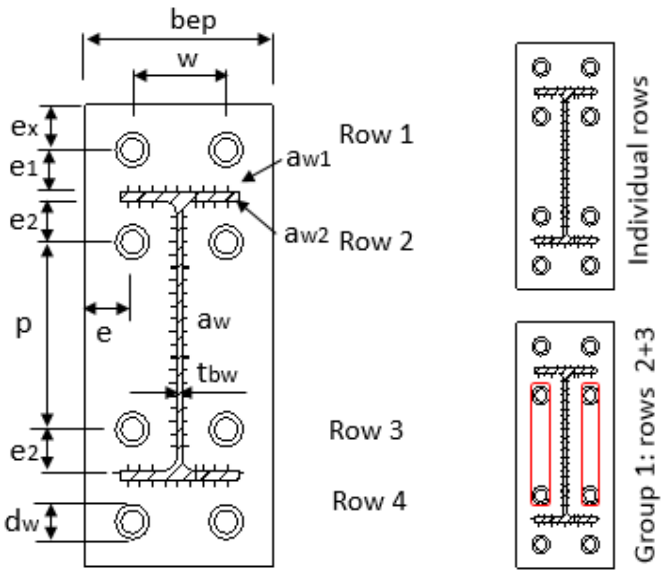

Cases of 4 bolt rows

For each bolt row or for a group of bolt rows, the resistance is obtained using the following formula:

$F_{pb,Rd} = \min[F_{T,1,Rd}; F_{T,2,Rd}]$ with

- $F_{T,1,Rd} = \dfrac{(8n - 2e_w) M_{pl,1,Rd}}{2mn - e_w (m+n)}$
- $F_{T,2,Rd} = \dfrac{2M_{pl,2,Rd} + n\Sigma F_{t,Rd}}{m+n}$

In which: $M_{pl,1,Rd} = 0,25\Sigma \ell_{eff,1} t_{ep}^{\ 2} f_{y,ep} / \gamma_{M0}$

$M_{pl,2Rd} = 0,25\Sigma \ell_{eff,2} t_{ep}^{\ 2} f_{y,ep} / \gamma_{M0}$

$\begin{cases} m = 0.5(b_{ep} - 2e - t_{bw} - 1.6a_w\sqrt{2}) \\ n = \min[e, 1.25m] \end{cases}$ for bolt rows inside the beam flanges

$\begin{cases} m = e_1 - 0.8a_{w1}\sqrt{2} \\ n = \min[e_x, 1.25m] \end{cases}$ for bolt rows outside the beam flanges

(with circular patterns, n=∞ can be used).

$e_w = 0.25d_w$

Effective lengths

- *Connection with 6 bolt rows*

<u>*Bolt row 1*</u>:

$$l_{eff,1} = \min \begin{cases} 2\pi m, \ \pi m + w, \ \pi m + 2e \\ 4m + 1.25e_x, \ e + 2m + 0.625e_x, \ 0.5b_{ep}, \ 0.5w + 2m + 0.625e_x \end{cases}$$

$$l_{eff,2} = \min[4m + 1.25e_x, \ e + 2m + 0.625e_x, \ 0.5b_{ep}, \ 0.5w + 2m + 0.625e_x]$$

<u>*Bolt row 2 (or row 5)*</u>:

Individual row:

$$l_{eff,1} = \min[2\pi m, \alpha m]$$

$l_{eff,2} = \alpha m$

First row of the group 1(rows 2+3 or 4+5)

$l_{eff,1} = \min[\pi m + p_1, \quad 0.5p_1 + \alpha m - (2m + 0.625e)]$

$l_{eff,2} = 0.5p_1 + \alpha m - (2m + 0.625e)$

<u>*Bolt row 3 (or row 4)*</u>:

Individual row:

$l_{eff,1} = \min[2\pi m, \quad 4m + 1,25e]$

$l_{eff,2} = 4m + 1,25e$

Last row of the group 1 (rows 2+3 or 4+5):

$l_{eff,1} = \min[\pi m + p_1, \quad 2m + 0.625e + 0.5p_1]$

$l_{eff,2} = 2m + 0.625e + 0.5p_1$

First row (or last row) of the group 2 (rows 3+4):

$l_{eff,1} = \min[\pi m + p_2, \quad 2m + 0.625e + 0.5p_2]$

$l_{eff,2} = 2m + 0.625e + 0.5p_2$

Intermediate row of a group 3 (rows 2+3+4+5):

$l_{eff,1} = p_1 + p_2$

$l_{eff,2} = 0.5(p_1 + p_2)$

α is given by the figure 6.11 in EN-1993-1-8, depending on:

$\lambda_1 = \dfrac{m}{m+e}$; $\lambda_2 = \dfrac{m_2}{m+e}$

where:

$m_2 = e_1 - 0.8a_{w1}\sqrt{2}$ for bolt row 1

$m_2 = e_2 - 0.8a_{w2}\sqrt{2}$ for bolt row 2 or 5

- *Connection with 4 bolt rows*

<u>*Bolt row 1*</u>:

$$l_{eff,1} = \min\begin{cases} 2\pi m, \ \pi m + w, \ \pi m + 2e \\ 4m + 1.25e_x, \ e + 2m + 0.625e_x, \ 0.5b_{ep}, \ 0.5w + 2m + 0.625e_x \end{cases}$$

$l_{eff,2} = \min[4m + 1.25e_x, \ e + 2m + 0.625e_x, \ 0.5b_{ep}, \ 0.5w + 2m + 0.625e_x]$

<u>*Bolt row 2:*</u>

Individual row:

$l_{eff,1} = \min[2\pi m, \quad \alpha m]$

$l_{eff,2} = \alpha m$

One row of the group 2+3

$l_{eff,1} = \min[\pi m + p, \quad 0.5p + 0.5\alpha m]$

$l_{eff,2} = 0.5p + 0.5\alpha m$

	Bolt row 3: similar to the bolt row 2: α is given by the figure 6.11 in EC3-1-8, depending on: $\lambda_1 = \frac{m}{m+e}$; $\lambda_2 = \frac{m_2}{m+e}$ $m_2 = e_1 - 0.8a_{w1}\sqrt{2}$ for bolt row 1 $m_2 = e_2 - 0.8a_{w2}\sqrt{2}$ for bolt row 2 or 3	
Beam flanges and web in compression	$F_{fbc,Rd} = M_{c,Rd} / (h - t_{fb})$ where: • h is the depth of the connected beam; • $M_{c,Rd}$ is the design moment resistance of the beam cross-section, reduced if necessary to allow for shear, see EN 1993-1-1. • t_{fb} is the flange thickness of the connected beam.	EC3-1-8 6.2.6.7
Column web and continuity plates in compression	The resistance of the column web and continuity plates may be computed by: $F_{wcc,Rd} = \frac{\omega k_{wc} b_{eff,cf} t_{wc} f_{y,wc}}{\gamma_{M0}} + \frac{A_{cp} f_{y,cp}}{\gamma_{M0}}$ where: $b_{eff,c,cf} = t_{fb} + \sqrt{2}(a_{w1} + a_{w2}) + 5(t_{fc} + r_c) + 2t_{ep}$ A_{cp} is the area of the continuity plates (both two sides); The reduction factor k_{wc} taking into account the axial stress in the column web, given in 6.2.6.2(2) of EC3-1-8; The reduction factor ω is given by Table 6.3 in EC3-1-8; *Note*: the reduction due to buckling of the column web and the continuity plates under transverse compression are neglected. The geometries (the slender) of the continuity plates to satisfy this condition will be shown in Table 4.3.1.	EC3-1-8 6.2.6.2
Beam web in tension	$F_{wbt,Rd} = b_{eff,wb} t_{wb} f_{y,wb} / \gamma_{M0}$ The effective width $b_{eff,t,wb}$ of the beam web in tension should be taken as equal to the effective length of the equivalent T-stub representing the end-plate in bending for an individual bolt-row or a bolt-group.	EC3-1-8 6.2.6.8
Column web in tension	$F_{wct,Rd} = \frac{\omega b_{eff,wc} t_{wc} f_{y,wc}}{\gamma_{M0}}$ The effective width $b_{eff,t,wc}$ of the column flange in tension should be taken as equal to the effective length of the equivalent T-stub representing the column flange in bending for an individual bolt-row or a bolt-group. The reduction factor ω is given by Table 6.3 in EC3-1-8.	EC3-1-8 6.2.6.3
Bolts in tension	The resistance of a bolt row (two bolts) in tension is given by: $F_{bt,Rd} = 2 \frac{0,9 f_{ub} A_s}{\gamma_{M2}}$ where: • f_{ub} is the ultimate tensile strength of the bolt;	EC3-1-8 3.6.1

	• A_s is the tensile stress area of the bolt.	

4.2.7 Component rigidities (joint under bending)

Component	Detailed rules	References
Column web panel in shear	$k_1 = \frac{0.38A_{vc}}{\beta z}$ The transformation parameter β is given in Table 5.4 of EC3-1-8. The lever arm, z, of the connection is given in EC-1-8, 6.3.3.1.	EC3-1-8 6.3.2
Column flange in bending	For simple bolt row in tension: $k_4 = \frac{0.9b_{eff,cf}t_{fc}^3}{m^3}$ The effective width b_{eff} is the smallest effective lengths of the bolt row (individual or as part of a group bolt rows).	EC3-1-8 6.3.2
End-plate in bending	For simple bolt row in tension: $k_5 = \frac{0.9b_{eff,ep}t_{ep}^3}{m^3}$ The effective width b_{eff} is the smallest effective lengths of the bolt row (individual or as part of a group bolt rows).	EC3-1-8 6.3.2
Column web in tension	For simple bolt row in tension: $k_3 = \frac{0.7b_{eff,wc}t_{wc}}{d_c}$ The effective width b_{eff} is the smallest effective lengths of the bolt row (individual or as part of a group bolt rows) of the column flange in bending component.	EC3-1-8 6.3.2
Bolts in tension	For simple bolt row in tension: $k_{10} = 1.6A_s / L_b$	EC3-1-8 6.3.2

4.2.8 Component resistance (joint under shear)

Component	Detailed rules	References
Beam web in shear	$V_{b,RD} = \chi_w A_{vb} f_{y,b} / \sqrt{3}\gamma_{M1}$ where: $A_{vb} = A_b - 2b_b t_{fb} + (t_{wb} + 2r_b)t_{fb}$ $\chi_w = 0.83/\bar{\lambda}_w$ if $\bar{\lambda}_w \geq 0.83$; $\chi_w = 1.0$ if $\bar{\lambda}_w < 0.83$ with $\bar{\lambda}_w = 0.3467(h_{wb}/t_{wb})\sqrt{f_{y,b}/E}$	EC3-1-5 5.3
Column flange in bearing	For simple bolt row (two bolts) in shear: $F_{b,Rd} = 2\frac{k_1 \alpha_b f_u d t_{fc}}{\gamma_{M2}}$ where: $k_1 = \min[2.8\frac{e}{d_0} - 1.7, \quad 2.5]$ α_b depending on the sear load direction and bolt row position: *Shear load going down* Bolt rows 1, 5 and 6 (or (*) rows 1, 3 and 4): $\alpha_b = 1.0$ Bolt rows 2 and 4 (or(*): row 2): $\alpha_b = \min[1.0, \quad p_1/3d_0 - 0.25]$ Bolt row 3: $\alpha_b = \min[1.0, \quad p_2/3d_0 - 0.25]$ *Shear load going up* Bolt rows 1, 2 and 6 (or(*) rows 1, 2 and 4) $\alpha_b = 1.0$ Bolt rows 3 and 5 (or(*) row 3) $\alpha_b = \min[1.0, \quad p_1/3d_0 - 0.25]$ Bolt row 4: $\alpha_b = \min[1.0, \quad p_2/3d_0 - 0.25]$ (*): used for joint with 4 bolt rows (p_1 should be replaced by p)	EC3-1-8 3.6.1
End-plate in bearing	For simple bolt row (two bolts) in shear: $F_{b,Rd} = 2\frac{k_1 \alpha_b f_u d t_{fc}}{\gamma_{M2}}$ $k_1 = \min[2.8\frac{e}{d_0} - 1.7, \quad 2.5]$ *Shear load going down*: Bolt rows 2 and 6 (or(*) rows 2 and 4): $\alpha_b = 1.0$ Bolt row 1 (or(*) row 1): $\alpha_b = \min[1.0, \quad e_x/3d_0]$ *Shear load going up*: Bolt rows 1 and 5 (or(*) rows 1 and 3): $\alpha_b = 1.0$ Bolt row 6 (or(*) row 4): $\alpha_b = \min[1.0, \quad e_x/3d_0]$	EC3-1-8 3.6.1

	Bolt rows 3 and 5 (or(*) row 3): $\alpha_b = \min[1.0, \quad p_1 / 3d_0 - 0.25]$ Bolt row 4: $\alpha_b = \min[1.0, \quad p_2 / 3d_0 - 0.25]$	Bolt rows 2 and 4 (or(*): row 2) $\alpha_b = \min[1.0, \quad p_1 / 3d_0 - 0.25]$ Bolt row 3: $\alpha_b = \min[1.0, \quad p_2 / 3d_0 - 0.25]$	
	(*): used for joint with 4 bolt rows (p_1 should be replaced by p)		
Bolts in shear	For simple bolt row (two bolts) in shear: $F_{b,Rd} = 2\frac{\alpha_v f_{ub} A_s}{\gamma_{M2}}$ α_v=0.6 for 8.8 bolts and α_v=0.5 for 10.9 bolts.		EC3-1-8 3.6.1

4.3 Haunched joints

4.3.1 Description of the join

Description of haunched extended end-plate joints

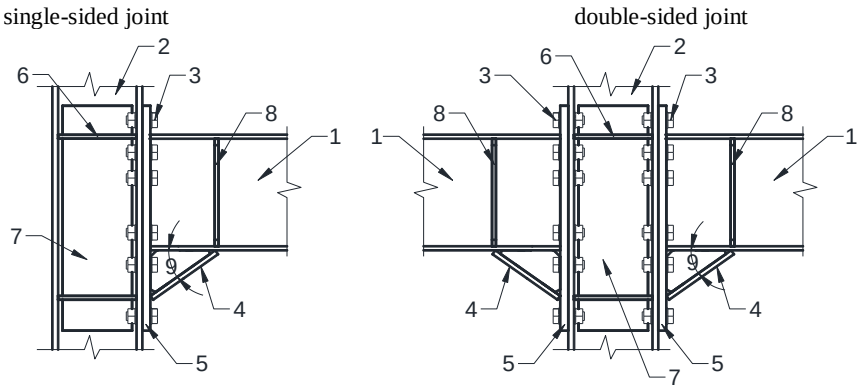

1: beam
2: column
3: bolts
4:haunch
5: end-plate
6: transverse column stiffeners
7: supplementary web plates
8: beam stiffener
9: haunch angle

Weld details for haunched extended end-plate joints

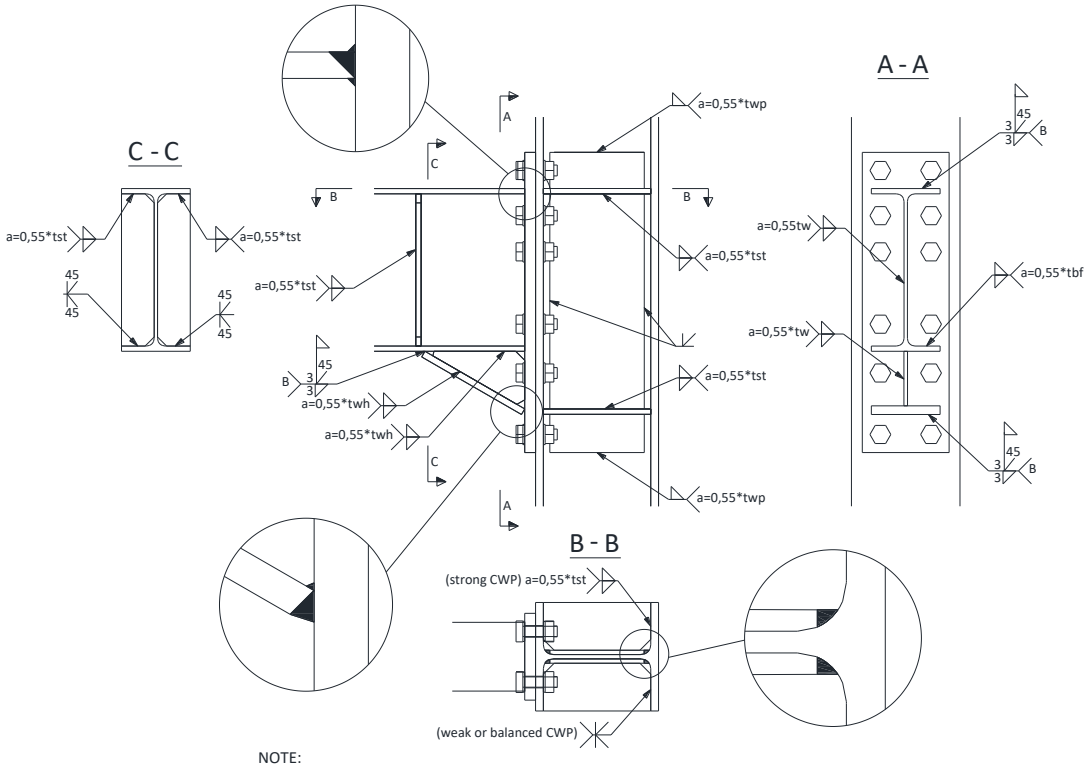

NOTE:
1. All full-penetration welds shall be quality level B acc. EN ISO 5817 and EN 1090-2:2008.
2. All welds shall be quality level C unless otherwise specified on drawings.

4.3.2 List of limit values for prequalified data

Table 4.5 - Limit values for prequalified data

Elements	Application range
Beam	Hot-rolled wide-flange beams ranging from IPE330 up to IPE600. Cross-section shall be class 1 according to EN 1993-1-1. Built-up beams with similar cross-section shape may be used, provided welds between the web and flanges are full-penetration groove welds reinforced with fillet welds.
Depth	330 to 600 mm
Clear span-to-depth ratio (between the assumed location of plastic hinges)	Minimum 7
Flange thickness	Minimum: 11 mm Maximum: 21 mm* (10% extrapolation with respect to the maximum tested)
Material	S235 to S355
Column	Hot-rolled wide-flange columns ranging from HEB260/HEM260 up to HEB550/HEM550. Cross-section shall be class 1 according to EN 1993-1-1. Built-up columns with similar cross-section shape may be used, provided welds between the web and flanges are full-penetration groove welds reinforced with fillet welds.
Depth	260 to 550 mm
Flange thickness	Minimum: 17.5 mm

	Maximum: 40 mm
Material	From S235 to S355
Beam/column depth	0.60-2.00
End-plate	20-40
Thickness	Minimum: 20 mm Maximum: 40 mm
Width	Minimum: beam flange width + 30 mm Maximum: column flange width
Material	From S235 to S355
Transverse column and beam stiffeners	According to requirements of EN 193-1-8 and EN 1998-1.
Material	From S235 to S355
Supplementary web plates	According to requirements of EN 1993-1-8 and EN 1998-1. It is allowed to consider the full area of the supplementary web plates in computing the additional shear strength of column web panel.
Height	At least equal to the height of the end plate.
Material	From S235 to S355
Bolts	High strength structural bolting assemblies for preloading, according to EN 14399-3 (system HR) and EN 14399-4 (system HV). Bolts shall be fully preloaded according to EN 1090-2.
Size	M24 to M36
Grade	8.8 or 10.9
Holes	According to EN 1993-1-8
Haunch	
Angle	Haunch angle measured between the bottom flange of the beam and the flange of the haunch can range from 30° to 45°.
Welds	
End-plate to top beam flange and haunch flange	Reinforced full penetration groove welds
Continuity plates to column flanges	Full penetration groove welds
Supplementary web plates to column flanges	Full penetration groove welds
Other welds	Fillet welds both sides with a throat thickness greater than 0.55 time of the thickness the connected plates.

4.3.3 Design procedure

Numerical simulations performed in the EQUALJOINTS project showed that for hogging bending moment the centre of compression is located at a distance Δ_C above the haunch flange. Based on the results available so far, it may be assumed that the centre of compression is shifted up by 50% of the haunch depth ($\Delta_C = 0.5\ h_h$, see Figure). For sagging moment, the usual assumption of centre of compression located at the middle of the compression flange is adopted. On the other hand, bolt rows located close to the compression centre develop negligible tension forces, due to flexibility of the end plate and limited ductility of the bolt rows at the tension flange.

Consequently, it was assumed that only the bolt rows which are above the mid-depth of the beam cross-section (without haunch) are active under hogging moment. Under sagging moment, only bolt rows located beyond mid-depth of the beam cross-section including haunch were assumed active.
Column web panel can be designed to be balanced with the beam, sharing with the latter plastic deformation demands, or to be stronger than the beam.

Centre of compression and active bolts rows for hogging (a) and sagging (b) moments.

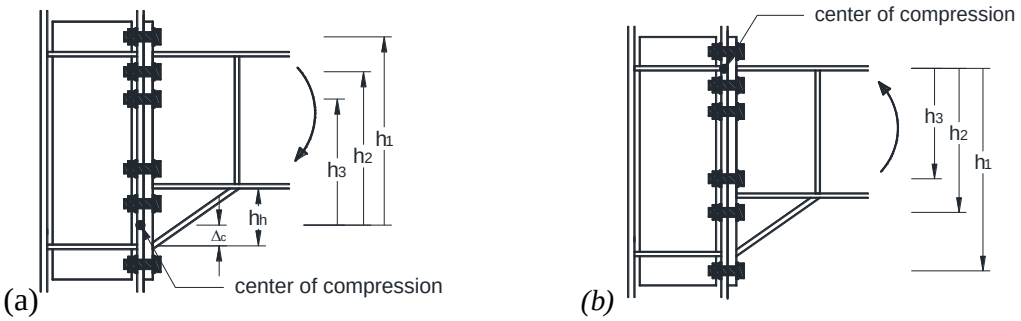

Global procedure

Step 1: Initial choice of the connection geometries and materials

- Bolt grade, bolt size and number of bolt rows
- Thickness and dimension of the end-plate
- Thickness and dimensions of haunch
- Thickness and dimensions of transverse stiffeners
- Thickness and dimensions of the supplementary web plates (if necessary)
- The weld specification

Step 2: Component characterisation

- Component resistances (joint under bending)
- Component stiffness (joint under bending)
- Component resistances (joint under shear)

Step 3: Assembly procedures

- Connection resistance in bending
- Connection resistance in shear
- Column web panel resistance
- Joint stiffness in bending

Step 4: Connection classification and check

4.3.4 Initial choice of the joint geometries and materials

Table 4.6 - Initial choice of joint geometries and materials

Connection elements	Beam sizes		
	Small (≈IPE360)	Middle (≈ IPE450)	High (≈ IPE600)
Bolt grade	10.9		
Bolt size	M27	M30	M36
Number of bolt rows	6	6	6
End-plate	*Thickness*: $t_{ep}=d_b$. *Dimensions*: The width should be larger than the beam flange width (by at least 30 mm in order to accommodate the weld) and smaller than the column flange. The extended part should be enough to position one bolt row, respecting the rules given in EN 1993-1-8 (§3.5).		
Haunch	Haunch flange width equal to beam flange width. Haunch flange thickness should be larger than γ_{ov} times the beam flange thickness. Haunch web thickness should be equal or larger than the beam web thickness. Haunch depth: • $h_h = 0.4*h_b$ for haunch angle of 30°≤α<40°; • $h_h = 0.5*h_b$ for haunch angle of 40°≤α≤45°.		
Supplementary web plates	The thickness and the dimensions of the supplementary web plates should respect the rules given in EN 1993-1-8 (§ 6.2.6.1), otherwise plug welds should be used to guarantee the stability strength of the supplementary plates.		
Transverse stiffeners	Table 4.5		
Weld details			
Note: t_{ep} is the thickness of the end-plate and d_b is the nominal diameter of the bolt.			

4.3.5 Assembly procedure and resistance checks

Classification type	Criterion	References
Connection resistance in bending	Full strength connection: $M_{con,Rd} \geq M_{con,Ed} = \alpha \cdot (M_{b,Rd} + V_{b,Ed} \cdot s_h)$ $\alpha = \gamma_{sh} \cdot \gamma_{ov}$	Equaljoints
Connection resistance in shear	$V_{con,Rd} \geq V_{b,Ed}$	Equaljoints
Resistance of column web panel in shear	Strong web panel: $V_{wp,Rd} \geq V_{wp,Ed}$ with $V_{wp,Ed} = \alpha \cdot (M_{b,Rd} + V_{b,Ed} \cdot s_h)/z - V_{c,Ed}$	Equaljoints
Rigidity classification	Classification: braced frames / Unbraced frames Semi-rigid joints: $0.5 \leq k_b < 8$ / $0.5 \leq k_b < 25$	EC3-1-8 5.2.2

	Rigid joints $k_b \geq 8$ $k_b \geq 25$ $k_b = S_{j,ini} / (EI_b / L_b)$	

Determine the design bending moment at the column face and the corresponding shear force.

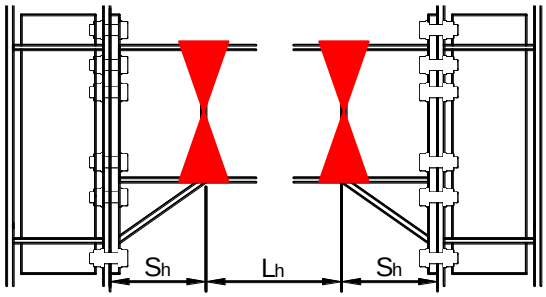

The design bending moment at the column face, corresponding to yielded and fully strain hardened plastic hinge at the end of the haunch is:

$$M_{con,Ed} = M_{b,Rd} + V_{b,Ed} \cdot s_h$$

The design shear force in the connection $V_{con,Ed}$ is determined based on the assumption that fully yielded and strain hardened plastic hinges form at both ends of the beam:

$$V_{con,Ed} \cong V_{b,Ed} = V_{Ed,M} + V_{Ed,G}$$

where:

$M^*_{pl,Rd} = \gamma_{sh} \cdot \gamma_{ov} \cdot W_{pl,beam} \cdot f_{y,beam}$ is the expected plastic moment at the plastic hinge location;

$W_{pl,beam}$ is the plastic modulus of the beam;

$f_{y,beam}$ is the specified minimum yield stress of the yielding element;

γ_{sh} is the strain-hardening factor to account for the peak connection strength;

γ_{ov}- is the material overstrength factor;

$V_{Ed,M}$ is the shear force due to the plastic hinges;

$V_{Ed,G}$ is the shear force due to gravity loads in the seismic design situation;

s_h is the distance from the face of the column to the plastic hinge;

L_h is the distance between plastic hinges.

Note: Experimental tests show that plastic hinge forms at some distance away from the haunch end. However, as a simplification, it may be assumed that the plastic hinge is located at the haunch end. More exact position may be used if needed.

Check the beam end including the haunch

The beam end including the haunch is checked according to EN 1993-1-1 for the expected design bending moment at the column face:

$$\frac{M_{con,Ed}}{M_{bh,Rd}} \leq 1{,}0$$

where:

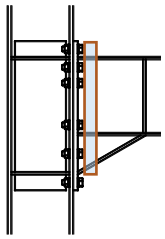

$M_{bh,Rd}$ is the plastic moment resistance of the double T section composed of beam top flange, haunch flange and beam-haunch web, neglecting the bottom beam flange, see subclause 6.2.6.7 of EN 1993-1-8 ; $M_{con,Ed}$ is the expected maximum moment at the column face. In order to account for possible material overstrength in beam with respect to the one in haunch, the haunch flange thickness is then increased by γ_{ov}.	
<u>Check the bending resistance of the end-plate connection.</u> Check the resistance of the connection in bending, under both hogging and sagging moments: $$\frac{M_{con,Ed}}{M_{con,Rd}} \leq 1{,}0$$ where $M_{con,Rd}$ is the bending resistance of the connection. The following components are used to obtain the moment resistance of the connections: • Column flange in bending; • End-plate in bending; • Beam web in tension; • Column web in tension; • Column web in compression. $M_{con,Rd}$ is determined according to EN 1993-1-8, with the following modifications: • under hogging moment only the bolt rows are above the mid-depth of the beam cross-section (without haunch) are assumed active. • under sagging moment, only bolt rows located beyond mid-depth of the beam cross-section including haunch are assumed active. • for hogging bending moment the center of compression is shifted up by 50% of the haunch depth ($\Delta_C = 0.5\ h_h$) • the following components are not taken into account: column web panel in shear, beam flange and web (and haunch) in compression.	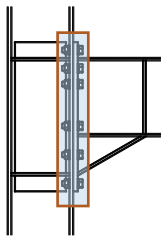
<u>Check shear resistance of the connection</u> $$\frac{V_{b,Ed}}{V_{con,Rd}} \leq 1{,}0$$ where $V_{con,Rd}$ is shear resistance of the connection. The following components are used to obtain the shear resistance of the connections: • Beam web in shear; • Bolts in bearing on column flange; • Bolts in bearing on end-plate; • Bolts in shear. Only the bolts not accounted for bending resistance of the connection should be accounted for.	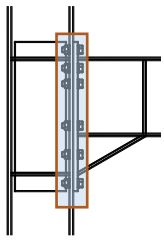
<u>Check column web panel</u> The design shear force in the column web panel is determined based on bending moments and shear forces acting on the web panel. $$V_{wp,Ed} = \alpha \cdot \left(M_{b,Rd} + V_{b,Ed} \cdot s_h\right)/z - V_{c,Ed}$$ where	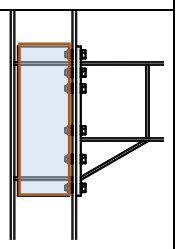

$V_{wp,Ed}$ is the design shear force in the column web panel; $V_{c,Ed}$ is the shear force in the column; z is the internal lever arm. For a *strong column web panel*, the design shear force should be obtained accounting for the development of fully yielded and strain hardened plastic hinges in the beam: $$\alpha = \gamma_{sh} \cdot \gamma_{ov}$$ The resistance of the column web panel checked with the following relation: $$\frac{V_{wp,Ed}}{V_{wp,Rd}} \leq 1{,}0$$ $V_{wp,Rd}$ is determined according to EN 1993-1-8. The following limitations apply: • It is allowed to consider the full area of the supplementary web plates in computing the additional shear strength of column web panel. • The additional shear resistance $V_{wp,add,Rd}$ due to column flanges and transverse stiffeners may be disregarded.	

4.3.6 Component characterization

Component	Detailed rules	References
Column web panel in shear	Rules in EN 1993-1-8, 6.2.6.1 apply, with the following observations: • It is allowed to consider the full area of the supplementary web plates in computing the additional shear strength of column web panel. • The additional shear resistance $V_{wp,add,Rd}$ due to column flanges and transverse stiffeners may be disregarded.	EN 1993-1-8 6.2.6.1 6.3.2
Column flange in bending	Rules in EN 1993-1-8 apply.	EN 1993-1-8 6.2.6.4 6.3.2
End-plate in bending	Rules in EN 1993-1-8 apply.	EN 1993-1-8 6.2.6.5 6.3.2
Column web in compression	Rules in EN 1993-1-8 apply.	EN 1993-1-8 6.2.6.2 6.3.2
Beam web in tension	Rules in EN 1993-1-8 apply.	EN 1993-1-8 6.2.6.8 6.3.2
Column web in tension	Rules in EN 1993-1-8 apply.	EN 1993-1-8 6.2.6.3 6.3.2
Beam web in shear	Rules in EN 1993-1-1 apply.	EN 1993-1-1 6.2.6

Component	Detailed rules	References
Bolts in bearing on column flange	Rules in EN 1993-1-8 apply.	EN 1993-1-8 3.6.1
Bolts in bearing on end-plate	Rules in EN 1993-1-8 apply.	EN 1993-1-8 3.6.1
Bolts in shear	Rules in EN 1993-1-8 apply.	EN 1993-1-8 3.6.1

4.3.7 Stiffness classification

Haunched extended end-plate beam-to-column joints may be considered to be rigid, provided:

- column web panel resistance is obtained using equation (6.7) in EN 1993-1-8, neglecting the additional shear resistance $V_{wp,add,Rd}$ due to column flanges and transverse stiffeners;
- centre-line model is used for the global structural analysis;
- bolts are category E (fully preloaded) according to EN 1993-1-8.

Rules in EN 1993-1-8 may be used to quantify connection and column web panel stiffness. Advanced modelling of connection and column web panel may be used in global structural analysis if needed.

4.3.8 Ductility classification

Haunched extended end-plate beam-to-column joints designed according to the provisions above are deemed to be qualified for application in DCH and DCM structural systems (moment resisting frames, dual concentrically braced frames and dual eccentrically braced frames).

This is based on the fact that all tested connections satisfied the following requirements (ANSI/AISC 341-16):

- The connection was capable of accommodating a story drift angle of at least 0.04 rad
- The measured flexural resistance of the connection, determined at the column face, was equal to least 0.80Mp of the connected beam at a story drift angle of 0.04 rad.

The user is cautioned though that storey drifts corresponding to 20% drop of the maximum moment were less than 0.04 rad (but larger than 0.03 rad) for haunches.

4.4 Dog bone joints

4.4.1 Description of the join

Configuration and dimensions of Reduced Beam Section Connections

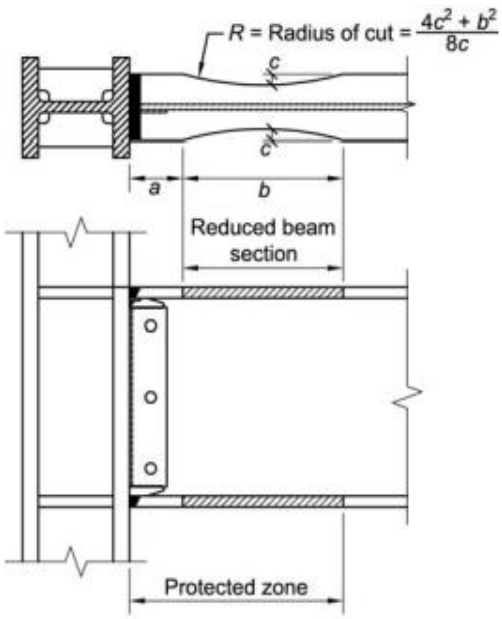

4.4.2 Design procedure

On this basis, the design needs to follow the requirements of AISC 341 (Seismic Provisions for Structural Steel Buildings), AISC 358-16 (Prequalified Connections for Seismic Applications) and AISC 360 (Specification for Structural Steel Buildings).

Based on the above, the design follows the following procedure:

1. Check beam local buckling for seismic compactness
   $b_{bf}/(2t_{fb}) \quad < \quad \lambda_{ps} \quad = \quad 0.3\sqrt{(E/f_y)}$
2. Check column local buckling for seismic compactness
   $b_{cf}/(2t_{fc}) \quad < \quad \lambda_{ps} \quad = \quad 0.3\sqrt{(E/f_y)}$
3. Check Beam Limitations of AISC 358 Sect 5.3.1
   Noting however that based on the tests carried out in the EqualJoints project, the beam sizes can be extended from depth of W36 to W44 which demonstrated adequate behaviour under the prequalification requirements.
4. Check Column Limitations of AISC 358 Sect 5.3.2
   Noting however that based on the tests carried out in the EqualJoints project, the column sizes can be extended from depth of W36 to W40 which demonstrated adequate behaviour under the prequalification requirements.
5. Determine plastic section modulus at the centre of the reduced beam section (AISC 358 Sect 5.8, Step 2)
   $Z_{RBS} \quad = \quad Z_x - 2\, c\, t_{fb}\, (h_b - t_{fb})$

   Where:

   Z_{RBS} is the plastic section modulus at the centre of the reduced beam section

   $Z_{pl.x}$ is the plastic section modulus about the x-axis for full beam cross section

t_{fb} is the thickness of the beam flange

h_b is the beam depth

c is the depth of cut at center of the reduced beam section

6. Determine probable maximum moment at the reduced beam section (AISC 358 Sect 5.8 Step 3)

   $M_{pr} = M_{RBS} = C_{pr} R_y f_y Z_e$

   Where:

   C_{pr} is a factor to account for the peak connection strength, including strain hardening, local restraint, additional reinforcement, and other connection conditions, calculated as follows:

   $$C_{pr} = \frac{f_y + f_u}{2 f_y} \leq 1.2$$

   R_y Ratio of the expected yield stress to the specified minimum yield stress, f_y

7. Compute the shear force at the centre of the RBS (AISC 358 Sect 5.8 Step 4)

   $V_p = V_{RBS} = 2 M_{pr} / L_h + V_g$

8. Compute the corresponding shear in the column

   $V_c = N_b V_e L_b / (N_c h_c)$

9. Compute the probable maximum moment at the face of the column (AISC 358 Sect 5.8 Step 5)

   $M_f = M_{pr} + V_{RBS} S_h + M_g$

   Where:

   $M_g = ½ W_{ub} S_h^2$

10. Compute the expected plastic moment of the beam (AISC 358 Sect 5.8 Step 6)

    $M_{pe} = R_y f_y Z_{bx}$

11. Check the flexural strength does not exceed $\Phi_d M_{pe}$ (AISC 358 Sect 5.8 Step 7)

    $M_f < \Phi_d M_{pe}$

12. Calculate and check the concentrated force in the column

    $$P_b \leq \Phi f_y w_{tw} (5k + l_b)$$
    $$\leq \Phi\, 0.8\, t_w^2 [1 + 3 (l_b / d) (t_w / t_f)^{1.5}] (E f_{yw} t_f / t_w)^{1/2}$$
    $$\leq \Phi\, 6.25 f_{yf} t_f^2$$

    Where:

    $P_b = M_f b_{fb} t_{fb} / Z_x$

13. Check column-beam moment ratio (AISC 341 Sect. 9.6)

    $\Sigma M_{pc}^* / \Sigma M_{pb}^* > 1.0$

Where:

ΣM_{pc}* is the sum of moments in the column above and below the joint at the intersection of the beam and column centreline

$$= \quad \Sigma[\ Z_c\ (\ f_{yc} - P_{uc} / A_g\ ) + V_c\ d_b / 2\ )\ ]$$

ΣM_{pb}* is the sum of moments in the beams at the intersection of the beam column centreline

$$= \quad N_b\ M_{RBS} + \Sigma M_v$$

ΣM_v is the additional moment due to the shear amplification from the location of the plastic hinge to the column centreline

$$= \quad (\ V_{RBS} + V'_{RBS}\ )\ (\ a + b / 2 + d_c / 2\ )$$

14. Check column panel zone shear strength (AISC341 Sect 9.3)

$$0.75\ P_c > \quad P_r$$

$$\varphi_v\ R_n \quad > \quad \Sigma M_f / (\ d_b - t_{fb}\ ) - V_c$$

15. Calculate required thickness of doubler plate

$$R_u \quad \leq \quad \varphi\ R_{ncol} + \varphi\ R_{ndp}$$

$$t_{dp} \quad \geq \quad (\ R_u - \varphi\ R_{ncol}\ ) / (\ 0.6\ f_y\ d_c\ )$$

16. Check required thickness of column web and doubler plate if provided

$$t \quad \geq \quad (\ d_z + w_z\ ) / 90$$

17. Check if continuity plates are required (AISC 358 Step 10)

$$t_{fc} \quad \geq \quad 0.4\ [\ 1.8\ b_b\ f_t\ b_f\ (\ F_{yb}\ R_{yb}\ ) / (\ F_{yc}\ R_{yc}\ )\ ]\ 0.5$$

$$t_{fc} \quad \geq \quad b_{fb} / 6 \text{ or } 12$$

18. Calculate required thickness of continuity plate

Check 1: $t_s \quad \geq \quad 0.5\ t_{bf}$

Check 2: $P_b \quad \leq \quad \varphi\ R_{ncol} + \varphi\ R_{ncp}$

$$t_s \quad \geq \quad (\ P_b - \varphi\ R_{ncol}\ ) / (\ 0.9\ f_y\ b_{bf})$$

5. REFERENCES

[1] CEN (2005). "EN 1993-1-8:2005, Eurocode 3: Design of steel structures – Part 1-8: Design of joints", European Committee for Standardization, Brussels, Belgium.
[2] ECCS (2018). "Volume with pre-normative design recommendations for seismically qualified steel joints", 1st edition.

Disclaimer

This software enables the user to access a database of seismically prequalified steel joints and also calculates the resistance of beam-to-column joints according to EC3-1-8 and EQUALJOINTS project specifications.

No warranty is given to the user of the software. The user agrees to indemnify and hold harmless from any claim and any direct and/or indirect loss or damage, including but not limited to those resulting from an incorrect use and/or a use made for an inadequate or inappropriate purpose.